1. ALL RESISTANCE VALUES ARE IN OHMS, 0.1 WATT +/- 5%.
2. ALL CAPACITANCE VALUES ARE IN MICROFARADS.
3. ALL CRYSTALS & OSCILLATOR VALUES ARE IN HERTZ.

PART#	QTY	DESCRIPTION	REFERENCE DESIGNATOR(S)	CRITICAL	BOM OPTION
051-02542	1	SCHEM,MLB-A,YN,J71B	SCH1	CRITICAL	
820-00996	1	PCBF,MLB-A,YN,J71B	PCB1	CRITICAL	

J71B MLB_A

REV	ECN	DESCRIPTION OF REVISION	CK APPD / DATE
A	0011206598	PRODUCTION RELEASED	2018-02-13

LAST_MODIFICATION=Tue Feb 13 14:37:32 2018

PAGE	CSA	CONTENTS	SYNC	DATE
1	1	TABLE OF CONTENTS		
2	2	BLOCK DIAGRAM: SYSTEM	JAMES_MLBB1	12/20/2017
3	4	BOM TABLES	J71S_MLB_B	01/27/2017
4	5	SOC: MISC & ALIASES	JAMES_MLBB1	12/20/2017
5	6	NAND	JAMES_MLBB1	12/20/2017
6	7	SOC:JTAG,USB,XTAL	JAMES_MLBB1	12/20/2017
7	8	SOC:PCIE	JAMES_MLBB	08/21/2017
8	9	SOC:MIPI AND ISP	JAMES_MLBB1	12/20/2017
9	10	SOC:LPDP	JAMES_MLBB1	12/20/2017
10	11	SOC:SERIAL	JAMES_MLBB1	12/20/2017
11	12	SOC:GPIO & UART	JAMES_MLBB1	12/20/2017
12	13	SOC:AOP	JAMES_MLBB1	12/20/2017
13	14	SOC:POWER (1/3)	JAMES_MLBB1	12/20/2017
14	15	SOC:POWER (2/3)	JAMES_MLBB1	12/20/2017
15	16	SOC:POWER (3/3)	JAMES_MLBB1	12/20/2017
16	17	IO: TRISTAR	JAMES_MLBB1	12/20/2017
17	18	AUDIO: HP/DMIC FLEX CONNS	JAMES_MLBB1	12/20/2017
18	19	AUDIO: CLIFDEN & BELFIELD	JAMES_MLBB1	12/20/2017
19	20	AUDIO: SPEAKER AMPS LEFT	JAMES_MLBB1	12/20/2017
20	21	AUDIO: SPEAKER AMPS RIGHT	JAMES_MLBB1	12/20/2017
21	22	SENSOR: MESA SUPPORT	JAMES_MLBB1	12/20/2017
22	23	SENSOR: MESA BOOST	JAMES_MLBB1	12/20/2017
23	25	SENSOR: HALL, CARBON, COMPASS, PHOS	JAMES_MLBB1	12/20/2017
24	26	IO: BUTTON FLEX CONN	JAMES_MLBB1	12/20/2017
25	27	CAMERA: FF AND ALS CONN	JAMES_MLBB1	12/20/2017
26	29	CAMERA: REAR CONN & FILTERS	JAMES_MLBB1	12/20/2017
27	30	TOUCH: KONA #1	JAMES_MLBB1	12/20/2017
28	31	TOUCH: KONA #2	JAMES_MLBB1	12/20/2017
29	32	TOUCH: CONNS	JAMES_MLBB1	12/20/2017
30	37	IO: FLEX HOTBAR & FILTERS	JAMES_MLBB1	12/20/2017
31	38	SENSOR-BTN: HALL, HOME & MESA	JAMES_MLBB1	12/20/2017
32	41	DISPLAY: EDP CONN	JAMES_MLBB1	12/20/2017
33	49	RADIOS: ALIASES	J71S_MLB_B	01/27/2017
34	74	SECURE ELEMENT	SECUREELEMENT	02/13/2018
35	75	WIFI/BT: MODULE	WIFI_MLB	11/16/2017
36	76	WIFI/BT: J71B FRONT END	WIFI_MLB	11/16/2017
37	81	POWER: ANGEL (1/5)	JAMES_MLBB1	12/20/2017
38	82	POWER: ANGEL (2/5)	JAMES_MLBB1	12/20/2017
39	83	POWER: ANGEL (3/5)	J71S_MLB_B	01/27/2017
40	84	POWER: ANGEL (4/5)	JAMES_MLBB1	12/20/2017
41	85	POWER: ANGEL (5/5)	JAMES_MLBB1	12/20/2017
42	86	POWER: EXTERNAL SWITCHES & LDOS	JAMES_MLBB1	12/20/2017
43	87	POWER: BUCKS 4,5,8	JAMES_MLBB1	12/20/2017
44	88	BEACON2	JAMES_MLBB1	12/20/2017
45	89	POWER: BATTERY CONNECTOR	JAMES_MLBB1	12/20/2017
46	93	TEST: TP/HOLES/FIDUCIALS	J71S_MLB_B	01/27/2017
47	94	TEST: EE TP/PP	J71S_MLB_B	01/27/2017
48	121	POWER: ALIASES	J71S_MLB_B	01/27/2017

TABLE OF CONTENTS

SYNC_MASTER=J71S_MLB_B SYNC_DATE=01/27/2017

DRAWING TITLE

SCHEM,MLB-A,YN,J71B

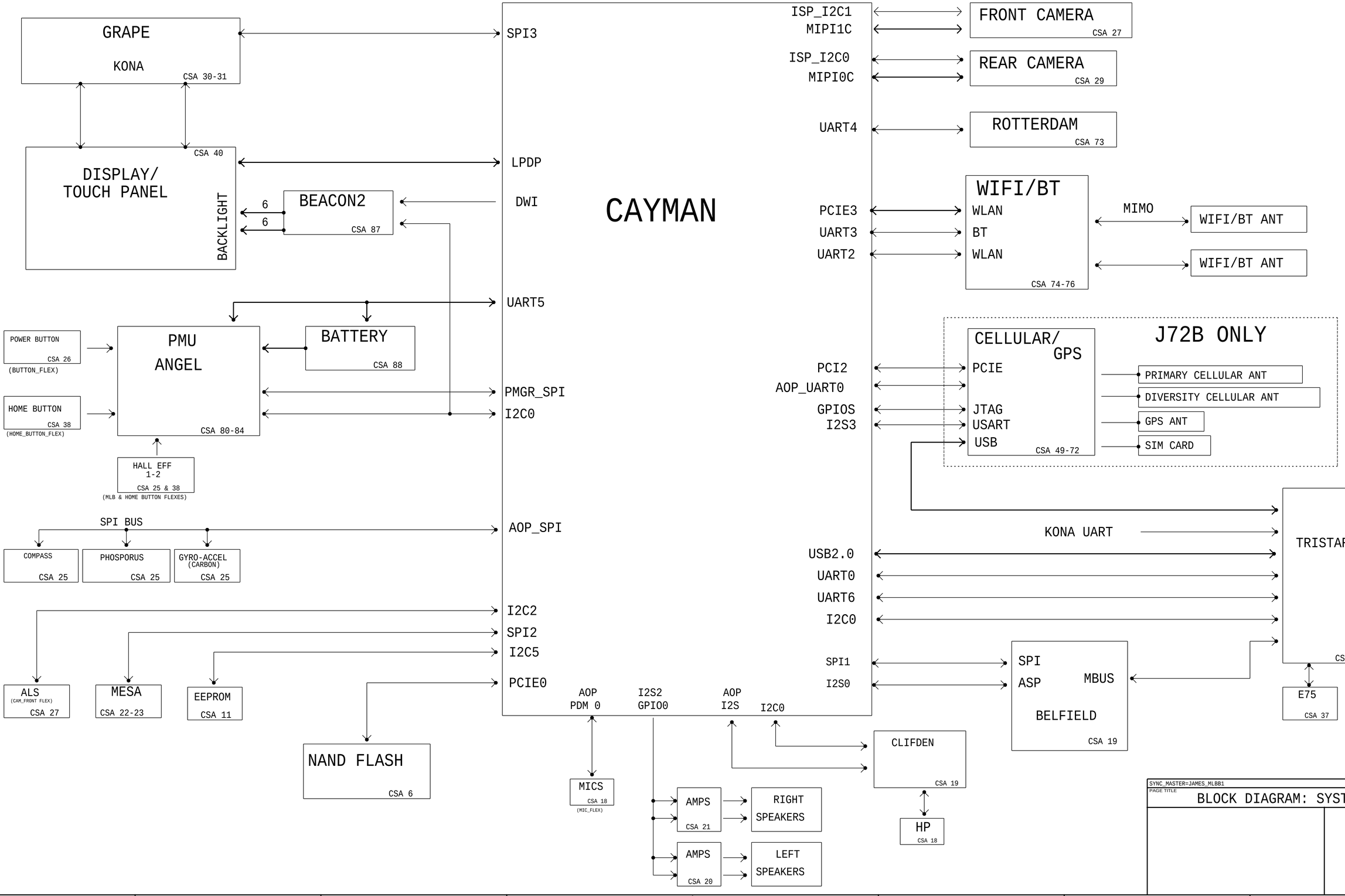
GRAPE
KONA
CSA 30-31
SPI3
DISPLAY/
TOUCH PANEL
CSA 40
BACKLIGHT
LPDP
BEACON2
CSA 87
6
6
DWI
CAYMAN
UART5
POWER BUTTON
CSA 26
(BUTTON_FLEX)
HOME BUTTON
CSA 38
(HOME_BUTTON_FLEX)
PMU
ANGEL
CSA 80-84
BATTERY
CSA 88
HALL EFF
1-2
CSA 25 & 38
(MLB & HOME BUTTON FLEXES)
PMGR_SPI
I2C0
SPI BUS
AOP_SPI
COMPASS
CSA 25
PHOSPORUS
CSA 25
GYRO-ACCEL
(CARBON)
CSA 25
I2C2
SPI2
I2C5
PCIE0
ALS
(CAM_FRONT FLEX)
CSA 27
MESA
CSA 22-23
EEPROM
CSA 11
NAND FLASH
CSA 6
AOP
PDM 0
I2S2
GPIO0
AOP
I2S
I2C0
MICS
CSA 18
(MIC_FLEX)
AMPS
CSA 21
AMPS
CSA 20
RIGHT
SPEAKERS
LEFT
SPEAKERS
CLIFDEN
CSA 19
HP
CSA 18
ISP_I2C1
MIPI1C
ISP_I2C0
MIPI0C
UART4
PCIE3
UART3
UART2
PCI2
AOP_UART0
GPIO5
I2S3
USB2.0
UART0
UART6
I2C0
SPI1
I2S0
FRONT CAMERA
CSA 27
REAR CAMERA
CSA 29
ROTTERDAM
CSA 73
WIFI/BT
WLAN
BT
WLAN
CSA 74-76
MIMO
WIFI/BT ANT
WIFI/BT ANT
J72B ONLY
CELLULAR/
GPS
PCIE
JTAG
USART
USB
CSA 49-72
PRIMARY CELLULAR ANT
DIVERSITY CELLULAR ANT
GPS ANT
SIM CARD
KONA UART
TRISTAR
CSA 17
SPI
ASP
MBUS
BELFIELD
CSA 19
E75
CSA 37
SYNC_MASTER=JAMES_MLBB1
SYNC_DATE=12/20/2017
PAGE TITLE
BLOCK DIAGRAM: SYSTEM

Page Notes

Power aliases required by this page:
(NONE)

Signal aliases required by this page:
(NONE)

BOM options provided by this page:

SOC

PART#	QTY	DESCRIPTION	REFERENCE DESIGNATOR(S)	CRITICAL	BOM OPTION
339S00485	1	PDP,CAYMAN+2GB 20NM,B1,A12,BN1,M,CSP1407	U0700	CRITICAL	

	PART NUMBER	ALTERNATE FOR PART NUMBER	BOM OPTION	REF DES	COMMENTS:
S	339S00486	339S00485		U0700	
H	339S00487	339S00485		U0700	

FLASH CONFIGURATIONS

	PART#	QTY	DESCRIPTION	REFERENCE DESIGNATOR(S)	CRITICAL	BOM OPTION
TOSHIBA	335S00307	1	NAND,3DV3,32GBT,XXX,S3E,128G,T,SLGA70	U0601	CRITICAL	32GB
WESTERN DIGITAL	335S00311	1	NAND,3DV3,64GBT,XXX,S3E,128G,SD,SLGA70	U0601	CRITICAL	64GB
TOSHIBA	335S00180	1	NAND,1Z,128GBT,B21,S3E,128G,T,SLGA70	U0601	CRITICAL	128GB
HYNIX	335S00156	1	NAND,3DV3,256GBT,S3E,256G,H,SLGA70	U0601	CRITICAL	256GB

	138S0867	5	CAP,X5R,10UF,20%,6.3V,0.65MM,HRZTL,0402	C0648,C0613,C0616,C0621,C0633	CRITICAL	32GB
	138S00003	5	CAP,X5R,15UF,20%,6.3V,0.65MM,HRZTL,0402	C0648,C0613,C0616,C0621,C0633	CRITICAL	64GB
	138S00003	5	CAP,X5R,15UF,20%,6.3V,0.65MM,HRZTL,0402	C0648,C0613,C0616,C0621,C0633	CRITICAL	128GB
	138S00003	5	CAP,X5R,15UF,20%,6.3V,0.65MM,HRZTL,0402	C0648,C0613,C0616,C0621,C0633	CRITICAL	256GB

PART NUMBER	ALTERNATE FOR PART NUMBER	BOM OPTION	REF DES	COMMENTS:	
335S00309	335S00307		U0601	WD 32G 3D-TLC 2DP	BICS3
335S00182	335S00180		U0601	HYNIX 128G TLC 8DP	

ANGEL

PART#	QTY	DESCRIPTION	REFERENCE DESIGNATOR(S)	CRITICAL	BOM OPTION
343S00203	1	IC,PMU,ANGEL,D2365A0,OTP-CC,WLCSP361	U8100	CRITICAL	

MECHANICAL PARTS

PART#	QTY	DESCRIPTION	REFERENCE DESIGNATOR(S)	CRITICAL	BOM OPTION
806-13579	1	FENCE,AP,J71B	PD_FENCE_AP	CRITICAL	
806-13581	1	CAN,TINY,J71B	PD_TINY_CAN	CRITICAL	

PART NUMBER	ALTERNATE FOR PART NUMBER	BOM OPTION	REF DES	COMMENTS:

BARCODE LABEL/EEEE CODES

PART#	QTY	DESCRIPTION	REFERENCE DESIGNATOR(S)	CRITICAL	BOM OPTION
825-7639	1	EEEE FOR BETTER	HWTW	CRITICAL	EEEE_J71B_BETTER
825-7639	1	EEEE FOR BEST	J8YQ	CRITICAL	EEEE_J71B_BEST
825-7639	1	EEEE FOR ULTIMATE	HYQQ	CRITICAL	EEEE_J71B_ULTIMATE
825-7639	1	EEEE FOR SUPREME	J8YR	CRITICAL	EEEE_J71B_SUPREME

PART NUMBER	ALTERNATE FOR PART NUMBER	BOM OPTION	REF DES	COMMENTS:	
155S00007	155S0667		L2710,L2711,L2910,L2911,L2912,L2913,L2920		
138S00049	138S0831		C0610,C0800,...	2.2UF 0201	
138S00006	138S0835		C0900,C0980,...	4.3UF	RDAR #22886293
138S00048	138S00003		C0160,C0161,...	15UF	
138S0945	138S0739		C1760,...	1UF	
138S0706	138S0739		C1760,...	1UF	
376S00071	376S00070		Q0504		
376S00159	376S1211		Q0550		
376S0948	376S00076		Q0900		
197S0369	197S0392		Y0300	32.768K XTAL	RDAR #24177192
155S00097	155S0664		FL2780,...	FILTER_2P	RDAR #23399925
155S00341	155S0755		FL4190	FERRITE BEAD	RDAR #23169091
155S00016	155S0686		L1800,...	FILTER_2P	
155S00342	155S0453	FL2290-FL2292,FL2295-FL2296		FILTER_2P	
155S00200	155S00400		FL2580,...	FILTER_2P	
138S0864	138S0709		C0547,...	4.7UF	RDAR #23320528
138S0875	138S0678		C01A0,...	10UF	
335S00066	335S0946		U1103	EEPROM	
131S00150	131S0890		C2285,C2302		
132S00088	132S0639		C3023,C3032		
138S00086	138S0884		C8204		
138S00024	138S0986				C1404,07,11,16-17,21,26,32-33 C1437,40,60-61; C1503, C7502
371S00118	371S00117		D3001		
376S00030	376S1131		Q1770		
377S0116	377S0108		DZ3700		
128S00067	128S00062		CR1CN,CR1CL,CR1C2		
132S00154	132S0683				C3001-05,08-10,19,28
155S00402	155S0511				L1900-05
155S00232	155S0665				FL1850-51, L4180,85
197S00120	197S0612		Y0700		
197S00118	197S0612		Y0700		
131S00172	131S00164		C0820,C0821	220PF	
131S00173	131S00164		C0820,C0821	220PF	
371S00173	371S0644		D0500		
371S00172	371S0490		D0801,D0802		

SYNC_MASTER=J71S_MLB_B SYNC_DATE=01/27/2017

PAGE TITLE

BOM TABLES

BOOT CONFIG ID

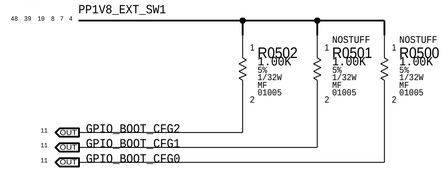

BOOT_CFG[2:0]	MODE
000	SPI0
001	SPI0 TEST MODE
010	NVME0 X2 MODE
011	NVME0 X2 TEST MODE
CURRENT SETTING ---> 100	NVME0 X1 MODE
101	NVME0 X1 TEST MODE
110	SLOW SPI0 TEST MODE
111	FAST SPI0 TEST MODE

S/W READ FLOW

1. SET GPIO AS INPUT
2. DISABLE PU AND ENABLE PD
3. READ

BOARD ID

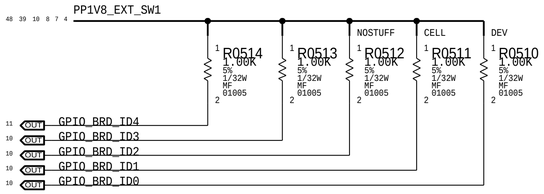

BRD_ID[4-0]	
11000	J71B AP (WIFI)
11001	J71B DEV
11010	J72B AP (CELL)
11011	J72B DEV

RDAR//PROBLEM/29855408

BOARD REVISION

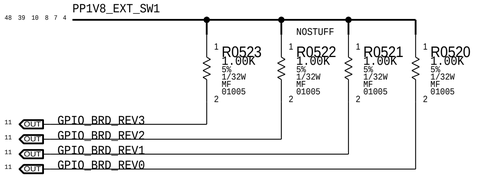

BRD_REV[3-0]	
1111	PROTO 0
1110	PROTO 1
1101	EVT
1100	DVT
---> 1011	PVT

S/W READ FLOW

1. SET GPIO AS INPUT
2. ENABLE PD AND DISABLE PU
3. READ

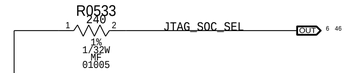

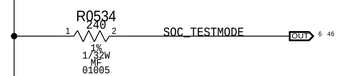



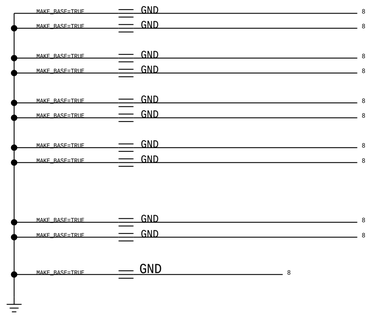

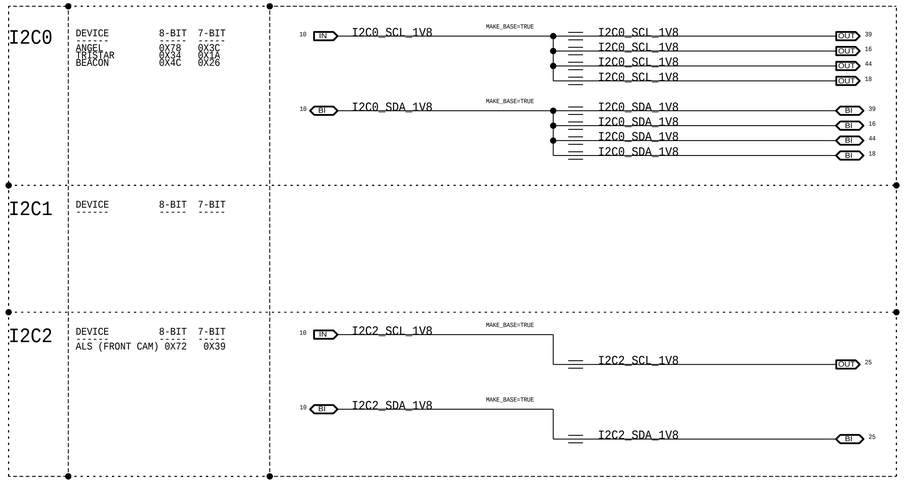

DC RESISTANCE FAI REQUIRED MEASUREMENTS

FROM PIN (REFDES.PN)	TO PIN (RFFDES.PN)	VALUE (MILLIOHM) (OPTIONAL)	TOLERANCE (+/-) (OPTIONAL)
U8100.W19	J8900.4	3.75	10%
U8100.H16	L2700.1	187.0	10%

SYNC_MASTER=JAMES_MLBB1 SYNC_DATE=12/20/2017

PAGE TITLE

SOC: MISC & ALIASES

315mA MAX

48 12 5 PP1V8_EXT_SW1 — R0603 24.9 1% 1/32W MF 01005 ROOM=NAND — VOLTAGE=1.8V PP1V8_NAND_AVDD

C0626 2.2UF 20% 6.3V X5R-CERM 0201 ROOM=NAND

C0610 0.1UF 20% 6.3V X5R-CERM 01005 ROOM=NAND

5 NAND_AGND

C0601 150UF 20% 6.3V X5R 0402-1 ROOM=NAND

C0607 150UF 20% 6.3V X5R 0402-1 ROOM=NAND

C0629 150UF 20% 6.3V X5R 0402-1 ROOM=NAND

C0630 150UF 20% 6.3V X5R 0402-1 ROOM=NAND

C0639 1.0UF 20% 6.3V X5R 0201-1 ROOM=NAND

C0641 1.0UF 20% 6.3V X5R 0201-1 ROOM=NAND

C0643 1.0UF 20% 6.3V X5R 0201-1 ROOM=NAND

C0645 1.0UF 20% 6.3V X5R 0201-1 ROOM=NAND

C0647 1.0UF 20% 6.3V X5R 0201-1 ROOM=NAND

C0608 220PF 5% 10V C0G-CERM 01005 ROOM=NAND

C0611 22PF 5% 16V CERM 01005 ROOM=NAND

C0617 68PF 5% 16V NP0-C0G 01005 ROOM=NAND

C0623 39PF 5% 16V NP0-C0G 01005 ROOM=NAND

C0612 100PF 5% 16V NP0-C0G 01005 ROOM=NAND

48 PP0V9_NAND

1007mA MAX

C0604 150UF 20% 6.3V X5R 0402-1 ROOM=NAND

C0602 150UF 20% 6.3V X5R 0402-1 ROOM=NAND

C0605 150UF 20% 6.3V X5R 0402-1 ROOM=NAND

C0622 15UF 20% 6.3V X5R 0402-1 ROOM=NAND

C0627 15UF 20% 6.3V X5R 0402-1 ROOM=NAND

C0637 1.0UF 20% 6.3V X5R 0201-1 ROOM=NAND

C0638 1.0UF 20% 6.3V X5R 0201-1 ROOM=NAND

C0640 1.0UF 20% 6.3V X5R 0201-1 ROOM=NAND

C0642 1.0UF 20% 6.3V X5R 0201-1 ROOM=NAND

C0644 1.0UF 20% 6.3V X5R 0201-1 ROOM=NAND

C0646 1.0UF 20% 6.3V X5R 0201-1 ROOM=NAND

C0603 220PF 5% 10V C0G-CERM 01005 ROOM=NAND

C0606 22PF 5% 16V CERM 01005 ROOM=NAND

C0609 100PF 5% 16V NP0-C0G 01005 ROOM=NAND

C0614 220PF 5% 10V C0G-CERM 01005 ROOM=NAND

C0620 100PF 5% 16V NP0-C0G 01005 ROOM=NAND

C0628 68PF 5% 16V NP0-C0G 01005 ROOM=NAND

#24543147:10uF for 32GB

#26326159:10uF for C1719

1230mA MAX (1us peak power)

48 PP3V3_EXT_SW

C0648 15UF 20% 6.3V X5R 0402-1 ROOM=NAND

C0613 15UF 20% 6.3V X5R 0402-1 ROOM=NAND

C0616 15UF 20% 6.3V X5R 0402-1 ROOM=NAND

C0619 10UF 20% 6.3V CERM-X5R 0402-9 ROOM=NAND

C0621 15UF 20% 6.3V X5R 0402-1 ROOM=NAND

C0633 15UF 20% 6.3V X5R 0402-1 ROOM=NAND

C0649 1.0UF 20% 6.3V X5R 0201-1 ROOM=NAND

C0650 1.0UF 20% 6.3V X5R 0201-1 ROOM=NAND

C0651 1.0UF 20% 6.3V X5R 0201-1 ROOM=NAND

C0652 1.0UF 20% 6.3V X5R 0201-1 ROOM=NAND

C0653 1.0UF 20% 6.3V X5R 0201-1 ROOM=NAND

C0654 1.0UF 20% 6.3V X5R 0201-1 ROOM=NAND

C0615 220PF 5% 10V C0G-CERM 01005 ROOM=NAND

C0618 22PF 5% 16V CERM 01005 ROOM=NAND

C0631 68PF 5% 10V NP0-C0G 01005 ROOM=NAND

C0632 39PF 5% 10V NP0-C0G 01005 ROOM=NAND

C0634 100PF 5% 10V NP0-C0G 01005 ROOM=NAND

C0635 220PF 5% 10V C0G-CERM 01005 ROOM=NAND

C0636 100PF 5% 10V NP0-C0G 01005 ROOM=NAND

48 12 5 PP1V8_EXT_SW1

C0624 0.01UF 10% 6.3V X5R 01005 ROOM=NAND

C0625 0.01UF 10% 6.3V X5R 01005 ROOM=NAND

NAND_VREF

U0601

THGBX6T1T82LFXF

VLGA

VER-1

ROOM=NAND

BOMOPTION=OMIT_TABLE

CRITICAL

M4 PCI_AVDD_CLK1 — J5 PCI_AVDD_CLK2 — J7 PCI_AVDD_H — K4 PCI_VDD1 — K6 PCI_VDD2 — C3 AVDD1 — E5 VREF — A3 VDD — A7 VDD — F2 VDD — J1 VDD — J9 VDD — R3 VDD — R7 VDD — A5 VDDIO — C8 VDDIO — C10 VDDIO — F0 VDDIO — F10 VDDIO — R5 VDDIO — A0 VCC — A10 VCC — D0 VCC — D10 VCC — G0 VCC — G10 VCC

47 10 CLK_SOC_TO_NAND_24MHZ — D2 CLK_IN

47 7 90_PCIE_AP_TO_NAND_REFCLK_P — H8 PCIE_REFCLK_P

47 7 90_PCIE_AP_TO_NAND_REFCLK_N — H6 PCIE_REFCLK_M

7 PCIE_NAND_BI_AP_CLKREQ_L — G9 PCIE_CLKREQ*

PCIE_NAND_RESREF — M6 PCI_RESREF

R0604 3.01K 1% 1/32W MF 01005 ROOM=NAND

7 90_PCIE_AP_TO_NAND_TXD_P — M8 PCIE_RX0_P

7 90_PCIE_AP_TO_NAND_TXD_N — K8 PCIE_RX0_M

NC — N5 PCIE_RX1_P

NC — N3 PCIE_RX1_M

7 90_PCIE_NAND_TO_AP_RXD_P — P8 PCIE_TX0_P

7 90_PCIE_NAND_TO_AP_RXD_N — N7 PCIE_TX0_M

NC — M2 PCIE_TX1_P

NC — K2 PCIE_TX1_M

6 AP_TO_NAND_RESET_L — F8 RESET*

NC — D8 TRST*

NAND_ZQ — D6 ZQ

R0601 34.8 0.5% 1/32W MF 01005 ROOM=NAND

B2 VSSA — B4 VSS — B6 VSS — OE10 VSS — G7 VSS — L3 VSS — L5 VSS — L7 VSS — P2 VSS — P4 VSS — P6 VSS — OC0 VSS — OC10 VSS — OE0 VSS

5 NAND_AGND

EXT_D0 G3 GPIO_PMU_TO_NAND_LOW_BATT_L — 39

EXT_D1 J3 GPIO_SOC_TO_NAND_FW_STRAP — 11

EXT_D2 H2 NC

EXT_D3 E3 NC

EXT_D4 E1 NC

EXT_D5 F0 NC

EXT_D6 C1 NC

EXT_D7 B8 SYSTEM_ALIVE — 14 39

EXT_NCE G1 PCIE_AP_TO_NAND_RESET_L — 7

EXT_NRE F4 SWD_AP_BI_NAND_SWDIO_R — R0602 0.00 1/32W 0% MF 01005 ROOM=NAND — SWD_AP_BI_NAND_SWDIO — 12

EXT_NWE C5 SWD_AP_NAND_SWCLK_R — R0607 0.00 1/32W 0% MF 01005 ROOM=NAND — SWD_NAND_SWCLK — 12

EXT_RNB G5 NC

EXT_CLE H4 NC

EXT_ALE D4

PAGE TITLE

NAND

SOC - USB, JTAG, XTAL

VDD18_USB: 1.71-1.89V @20mA MAX

PP1V8_EXT_SW1 48

C0700 0.1UF 20% 2 2.3V X5R-CERM 01005 ROOM=SOC

FL0700 240-OHM-25%-0.20A-1.0DCR 01005 ROOM=SOC

VDD11_XTAL:1.06-1.17V @TBD mA MAX

VOLTAGE=1.1V

PP1V1_XTAL 46

C0704 0.1UF 20% 2 2.3V X5R-CERM 01005 ROOM=SOC

PP1V1_S1_EXT_SW 48

C0705 2.2UF 20% 2 2.3V X5R-CERM 0201 ROOM=SOC

VDD18_AMUX: 1.62-1.98V @1mA MAX

48 PP1V8_EXT_SW1

PP3V3_USB 48

C0701 0.1UF 20% 2 2.3V X5R-CERM 01005 ROOM=SOC

3.14-3.46V @20mA MAX

CKPLUS_WAIVE=PWRTERM2GND

PPVDD_S1_FIXED 48

tbd - tbd V @5mA MAX

CL20 VDD12_UH1_HSIC0

AJ60 VDD18_AMUX

CE25 VDD18_USB

CG50 VDD11_XTAL

CG26 VDD33_USB

CC25 VDD_FIXED_USB

U0700

CAYMAN-2GB-20NM-DDR-M

CSP

SYM 1 OF 16

OMIT_TABLE

NC_UH1_HSIC0_DATA NO_TEST=1 — CM22 UH1_HSIC0_DATA

NC_UH1_HSIC0_STB NO_TEST=1 — CM20 UH1_HSIC0_STB

ANALOGMUX_OUT N64 — ADC_SOC_TO_PMU_ANALOGMUX_OUT 39

USB_DP CM26 — USB_SOC_P 16 46

USB_DM CL26 — USB_SOC_N 16 46

USB_VBUS CH26 — USB_VBUS_DETECT_R

R0751 30.1K 01005 1% 1/32W MF — USB_VBUS_DETECT 41

USB_ID CJ26 — USB_ID 46

USB_REXT CK26 — AP_USB_REXT

R0700 200 1% 1/32W MF 01005 ROOM=SOC

WDOG CK35 — GPIO_SOC_TO_PMU_WDOG_RESET 39

XI0 CM42 — XTAL_AP_24M_IN

XO0 CL42 — XTAL_AP_24M_OUT

R0701 511K 1% 1/32W MF 01005 ROOM=SOC

R0702 0.00 0% 1/32W MF 01005 ROOM=SOC

SOC_24M_O

CRITICAL C0702 12PF 5% 10V CERM 01005 ROOM=SOC

CRITICAL ROOM=SOC Y0700 1.60X1.20MM-SM 24MHZ-30PPM-60OHM

CRITICAL C0703 12PF 5% 10V CERM 01005 ROOM=SOC

48 45 39 16 PP1V8_S2

R0750 100K 5% 1/32W MF 01005

R0760 4.7K 5% 1/32W MF 01005

46 39 12 RESET_PMU_TO_SYSTEM_L

RESET_PMU_TO_SYSTEM_R_L — CM14 COLD_RESET*

C0750 1000PF 10% 6.3V X5R-CERM 01005

46 4 JTAG_SOC_SEL — CL31 JTAG_SEL

46 AP_JTAG_TRST_L — CL29 JTAG_TRST*

46 AP_JTAG_TDO — CG37 JTAG_TDO

46 AP_JTAG_TDI — CJ35 JTAG_TDI

46 16 JTAG_SOC_TMS — CK33 JTAG_TMS

46 16 JTAG_SOC_TCK — CH37 JTAG_TCK

47 39 16 12 GPIO_PMU_TO_SYSTEM_ACTIVE_READY — BJ3 CFSB

PP0701 PZMM-NSM SM — AP_TO_PMU_TEST_CLKOUT — BJ2 TST_CLKOUT

5 AP_TO_NAND_RESET_L — BL65 S3E_RESET*

BJ4 HOLD_RESET

46 4 SOC_TESTMODE — BL3 TESTMODE

PAGE TITLE

SOC:JTAG,USB,XTAL

SOC - PCIE INTERFACES

R0804 0.00 1/32W MF 01005 ROOM=SOC
VDD12_PCIE_REFBUF:1.08-1.26V @40mA MAX
VOLTAGE=1.2V
PP1V2_SOC_PCIE_REFBUF
C0802 0.1UF 20% 6.3V X5R-CERM 01005 ROOM=SOC

VDD_FIXED_PCIE_xxx:0.855-0.990V @225mA MAX
PPVDD_S1_FIXED 48
R0803 0.00 1/32W MF 01005 ROOM=SOC
C0803 0.1UF 20% 6.3V X5R-CERM 01005 ROOM=SOC
C0800 1.0UF 20% 6.3V X5R 0201-1 ROOM=SOC
C0806 2.2UF 20% 6.3V X5R-CERM 0201 ROOM=SOC

48 PP1V2_SOC
VDD12_PCIE: 1.14-1.26V @10mA MAX
C0805 2.2UF 20% 6.3V X5R-CERM 0201 ROOM=SOC
C0801 0.1UF 20% 6.3V X5R-CERM 01005 ROOM=SOC

VOLTAGE=0.9V
PP0V9_SOC_FIXED_PCIE_REFBUF
C0804 0.1UF 20% 6.3V X5R-CERM 01005 ROOM=SOC

CE58 VDD12_PCIE
CC49 CE49 VDD12_PCIE_REFBUF
CA55 CA60 VDD_FIXED_PCIE_CLK
CC53 CC62 CE55 CE60 VDD_FIXED_PCIE_ANA
BW55 CC47 VDD_FIXED_PCIE_REFBUF

PP1V8_FXT_SW1 4 7 8 10 39 48
R0805 100K 5% 1/32W MF 01005 ROOM=SOC
R0850 100K 5% 1/32W MF 01005 ROOM=SOC

U0700
CAYMAN-2GB-20NM-DDR-M
CSP
SYM 2 OF 16

PCIE_NAND_BI_AP_CLKREQ_L 5 → BC64 PCIE_CLKREQ0*
90_PCIE_AP_TO_NAND_REFCLK_P 47 5 → CJ48 PCIE_REF_CLK0_P
90_PCIE_AP_TO_NAND_REFCLK_N 47 5 → CK48 PCIE_REF_CLK0_N

#24557655:replace with 20% caps. SI no negative impact
CRITICAL
C0807 0.22UF 20% 6.3V X5R 01005-1 ROOM=SOC GND_VOID=TRUE
C0808 0.22UF 20% 6.3V X5R 01005-1 ROOM=SOC GND_VOID=TRUE
90_PCIE_NAND_TO_AP_RXD_P 5 → 90_PCIE_NAND_TO_AP_RXD_C_P → CM46 PCIE_RX0_P
90_PCIE_NAND_TO_AP_RXD_N 5 → 90_PCIE_NAND_TO_AP_RXD_C_N → CL46 PCIE_RX0_N

D10 NAND is now Gen3 (was Gen2). Caps intentionally 0.22uF
C0809 0.22UF 20% 6.3V X5R 01005-1 ROOM=SOC GND_VOID=TRUE
C0810 0.22UF 20% 6.3V X5R 01005-1 ROOM=SOC GND_VOID=TRUE
90_PCIE_AP_TO_NAND_TXD_P 5 → 90_PCIE_AP_TO_NAND_TXD_C_P → CK44 PCIE_TX0_P
90_PCIE_AP_TO_NAND_TXD_N 5 → 90_PCIE_AP_TO_NAND_TXD_C_N → CJ44 PCIE_TX0_N
PCIE_AP_TO_NAND_RESET_L 5 → BJ65 PCIE_PERST0*

R0802 100K 5% 1/32W MF 01005 ROOM=SOC

LINK0 LINK3

NC_AP_PCIE_CLKREQ1_L → BG66 PCIE_CLKREQ1* NO_TEST=1
NC_AP_PCIE_REF_CLKP_1 → CL54 PCIE_REF_CLK1_P NO_TEST=1
NC_AP_PCIE_REF_CLKN_1 → CM54 PCIE_REF_CLK1_N NO_TEST=1

NC_AP_PCIE_RXP_1 → CK52 PCIE_RX1_P NO_TEST=1
NC_AP_PCIE_RXN_1 → CJ52 PCIE_RX1_N NO_TEST=1

NC_AP_PCIE_TXP_1 → CM50 PCIE_TX1_P NO_TEST=1
NC_AP_PCIE_TXN_1 → CL50 PCIE_TX1_N NO_TEST=1
NC_AP_PCIE_PERST1_L → BG64 PCIE_PERST1* NO_TEST=1

LINK1 LINK2

CH57 PCIE_EXT_REF_CLK_P
CG57 PCIE_EXT_REF_CLK_N

PCIE_CLKREQ3* BE66 → AP_PCIE_CLKREQ3_L 33 46
PCIE_REF_CLK3_P CL64 → 90_AP_PCIE3_REFCLK_P 33 47
PCIE_REF_CLK3_N CM64 → 90_AP_PCIE3_REFCLK_N 33 47
PCIE_RX3_P CM61 → 90_AP_PCIE3_RXD_C_P 33 46
PCIE_RX3_N CL61 → 90_AP_PCIE3_RXD_C_N 33 46
PCIE_TX3_P CK63 → 90_AP_PCIE3_TXD_C_P 33
PCIE_TX3_N CJ63 → 90_AP_PCIE3_TXD_C_N 33
PCIE_PERST3* BJ66 → AP_PCIE_RESET3_L 33 46

R0806 100K 5% 1/32W MF 01005 ROOM=SOC

PCIE_CLKREQ2* BE65 → NC_AP_PCIE_CLKREQ2_L 33
PCIE_REF_CLK2_P CK59 → NC_90_AP_PCIE2_P_REFCLK 33
PCIE_REF_CLK2_N CJ59 → NC_90_AP_PCIE2_N_REFCLK 33
PCIE_RX2_P CK56 → NC_90_AP_PCIE2_RXD_P_C 33
PCIE_RX2_N CJ56 → NC_90_AP_PCIE2_RXD_N_C 33
PCIE_TX2_P CM57 → NC_90_AP_PCIE2_TXD_P_C 33
PCIE_TX2_N CL57 → NC_90_AP_PCIE2_TXD_N_C 33
PCIE_PERST2* BE64 → XNC

PCIE_REXT CG63 → AP_PCIE_RCAL
R0800 3.01K 1% 1/32W MF 01005 ROOM=SOC

PCIE LINK 0
PCIE LINK 3
PCIE LINK 2

PAGE TITLE
SOC:PCIE

SOC - MIPI & ISP INTERFACES

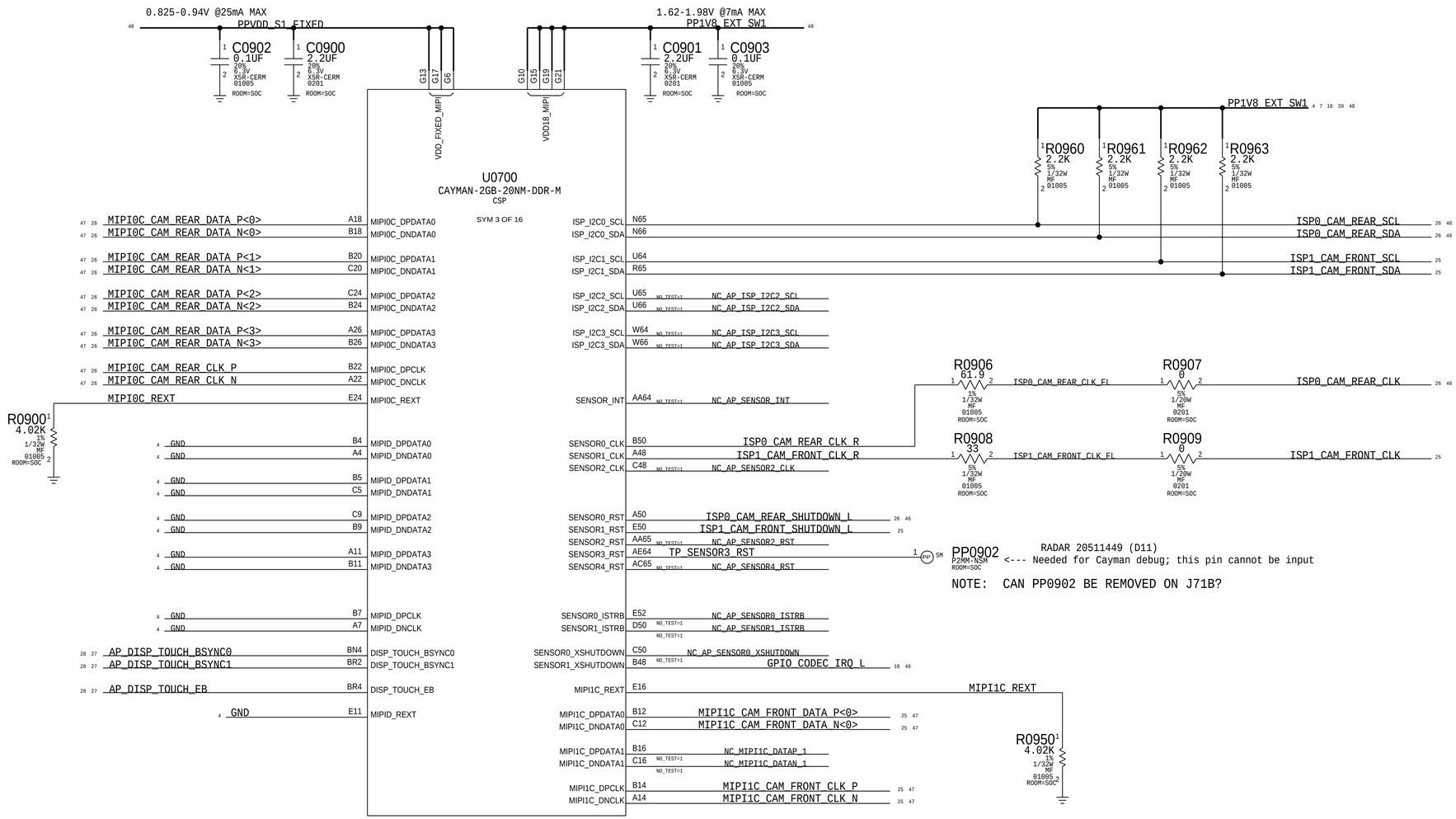

TO BE REVIEWED

PAGE TITLE

SOC:MIPI AND ISP

NOTE: D11 GROUNDED VDD12_LPDP_TX

48 PP1V2_SOC

VDD12_PLL_LPDP:1.14-1.26V @3mA MAX
VDD12_LPDP:1.14-1.26V @60mA MAX

C1013 2.2UF 20% 6.3V X5R-CERM 0201 ROOM=SOC
C1001 2.2UF 20% 6.3V X5R-CERM 0201 ROOM=SOC
C1004 0.1UF 20% 6.3V X5R-CERM 01005 ROOM=SOC
C1005 0.01UF 10% 6.3V X5R 01005 ROOM=SOC
C1002 15PF 5% 16V NP0-C0G-CERM 01005 ROOM=SOC Desense for Wifi frequencies

C25 G28 G30 G55 G58 G60 G62 G23

VDD12_LPDP_TX VDD12_LPDP_RX VDD12_PLL_LPDP

U0700
CAYMAN-2GB-20NM-DDR-M
CSP
SYM 4 OF 16

A54	LPDPRX_RX_D0_P		LPDP_TX0P	B27	EDP_DATA_P<0> 32 47
B54	LPDPRX_RX_D0_N		LPDP_TX0N	C27	EDP_DATA_N<0> 32 47
B56	LPDPRX_RX_D1_P		LPDP_TX1P	A29	EDP_DATA_P<1> 32 47
C56	LPDPRX_RX_D1_N		LPDP_TX1N	B29	EDP_DATA_N<1> 32 47
A61	LPDPRX_RX_D2_P		LPDP_TX2P	B31	EDP_DATA_P<2> 32 47
B61	LPDPRX_RX_D2_N		LPDP_TX2N	C31	EDP_DATA_N<2> 32 47
B63	LPDPRX_RX_D3_P		LPDP_TX3P	A33	EDP_DATA_P<3> 32 47
C63	LPDPRX_RX_D3_N		LPDP_TX3N	B33	EDP_DATA_N<3> 32 47
A64	LPDPRX_RX_D4_P				
B64	LPDPRX_RX_D4_N				
D54	LPDPRX_AUX_D0_P	NC_AP_LPDPRX_AUX_DP_0 NO_TEST=1	LPDP_AUX_P	D33	EDP_AUX_P 32
E56	LPDPRX_AUX_D1_P	NC_AP_LPDPRX_AUX_DP_1 NO_TEST=1	LPDP_AUX_N	E33	EDP_AUX_N 32
D61	LPDPRX_AUX_D2_P	NC_AP_LPDPRX_AUX_DP_2 NO_TEST=1	LPDP_CAL_DRV_OUT	E35	LPDP_CAL_DRV_OUT
E63	LPDPRX_AUX_D3_P	NC_AP_LPDPRX_AUX_DP_3 NO_TEST=1	LPDP_CAL_VSS_EXT	E31	LPDP_CAL_VSS_EXT
D64	LPDPRX_AUX_D4_P	NC_AP_LPDPRX_AUX_DP_4 NO_TEST=1	EDP_HPD	BN3	EDP_HPD 32
B59	LPDPRX_BYP_CLK_P		DP_WAKEUP	AP2	NC_AP_DP_WAKEUP NO_TEST=1
C59	LPDPRX_BYP_CLK_N				
A57	LPDPRX_RCAL_P	NC_AP_LPDPRX_P_RCAL NO_TEST=1			
B57	LPDPRX_RCAL_N	NC_AP_LPDPRX_N_RCAL NO_TEST=1			
D57	LPDPRX_EXT_C	NC_AP_LPDPRX_EXT_C NO_TEST=1			

#24401637:Unconnect LPDPRX_EXT_C

C1050 CRITICAL 20PF 5% 16V NP0-C0G-CERM 01005
R1050 100 1% 1/32W MF 01005

NOTE: "NC" & GROUNDED PER SANJEEV MAHESHWARI

PAGE TITLE
SOC:LPDP

SOC - SERIAL INTERFACES

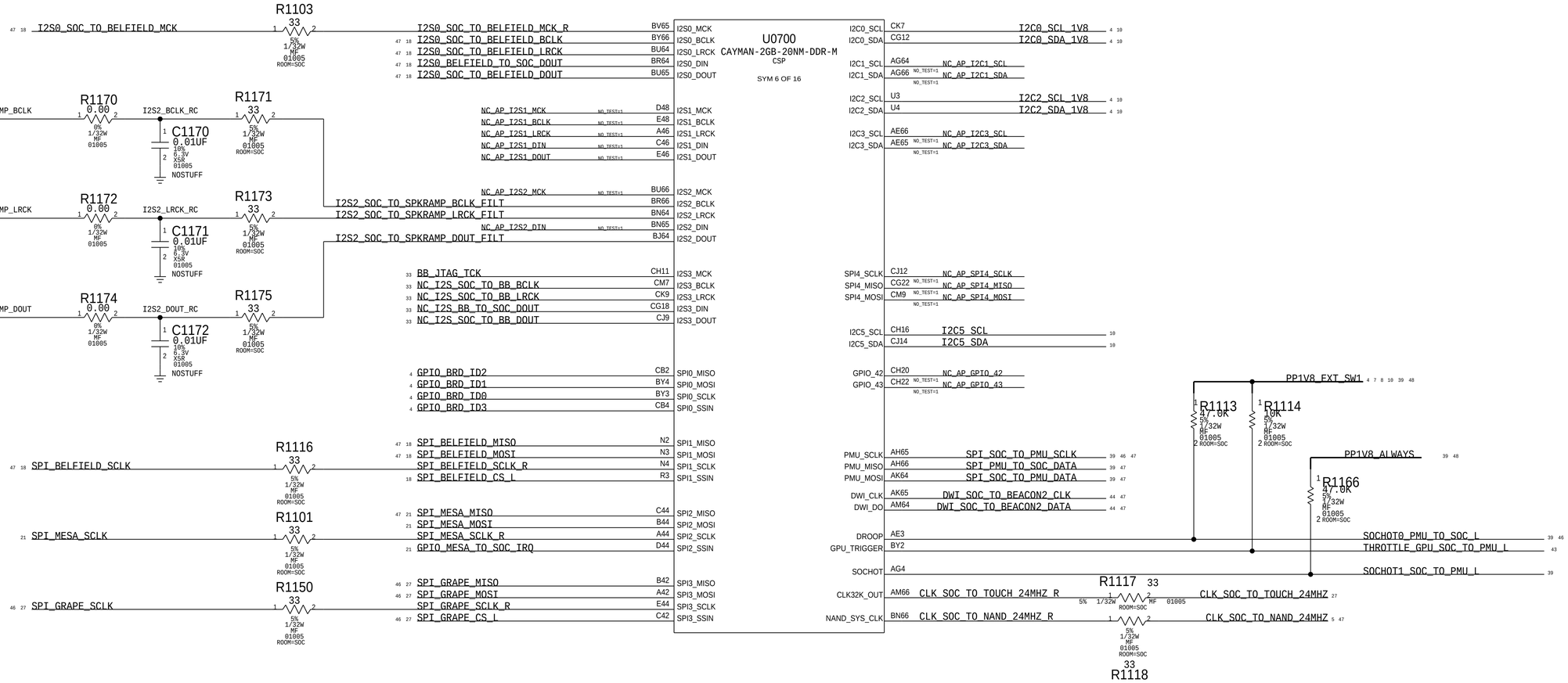

I2C5

See Radar#25316444 for Details

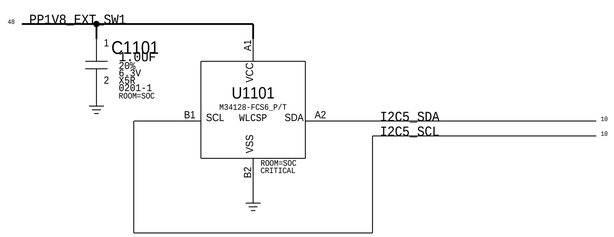

To Cayman

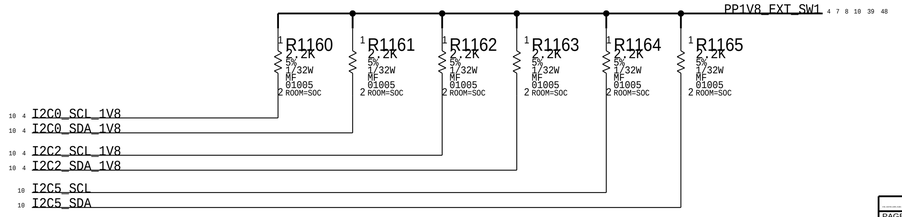

PAGE TITLE

SOC:SERIAL

SOC - GPIO INTERFACES

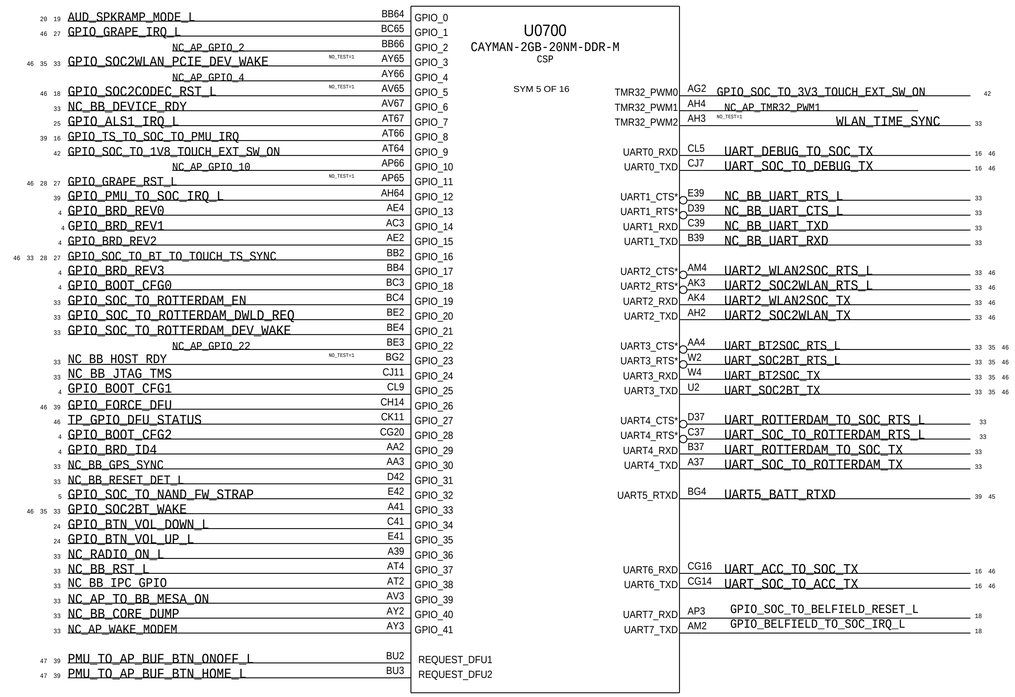

PAGE TITLE

SOC:GPIO & UART

SOC - AOP

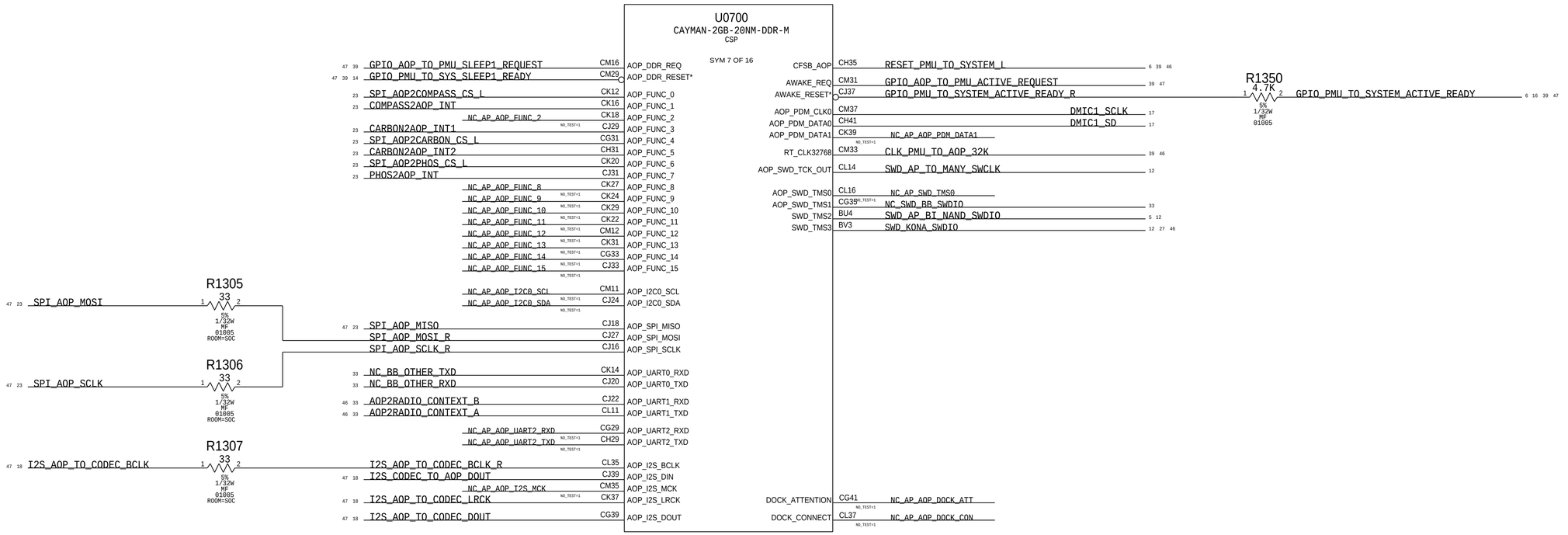

PAGE TITLE

SOC:AOP

SOC - CPU, GPU & SOC RAILS

PPVDD_CPU
1.06V @17.4A MAX
0.9V @tbd A MAX
0.625V @tbd A MAX

C1401 15UF 20% 6.3V X5R 0402-1
C1408 15UF 20% 6.3V X5R 0402-1
C1434 15UF 20% 6.3V X5R 0402-1
C1449 2.2UF 20% 6.3V X5R-CERM 0201 ROOM=SOC

C1404 7.5UF 20% 4V CERM 0402 CRITICAL ROOM=SOC
C1411 7.5UF 20% 4V CERM 0402 ROOM=SOC
C1417 7.5UF 20% 4V CERM 0402 ROOM=SOC
C1422 4.3UF 20% 4V CERM 0402 CRITICAL ROOM=SOC
C1427 4.3UF 20% 4V CERM 0402 ROOM=SOC
C1430 4.3UF 20% 4V CERM 0402 ROOM=SOC
C1405 4.3UF 20% 4V CERM 0402 ROOM=SOC
C1412 4.3UF 20% 4V CERM 0402 ROOM=SOC
C1418 1UF 20% 4V CERM 0402 CRITICAL ROOM=SOC
C1423 1UF 20% 4V CERM 0402 ROOM=SOC
C1428 1UF 20% 4V CERM 0402 ROOM=SOC
C1431 1UF 20% 4V CERM 0402 ROOM=SOC
C1406 0.47UF 20% 6.3V CERM 0402 CRITICAL ROOM=SOC
C1413 0.47UF 20% 6.3V CERM 0402 ROOM=SOC
C1419 0.47UF 20% 6.3V CERM 0402 ROOM=SOC
C1424 0.47UF 20% 6.3V CERM 0402 ROOM=SOC
C1460 7.5UF 20% 4V CERM 0402 ROOM=SOC
C1461 7.5UF 20% 4V CERM 0402 ROOM=SOC

AD10 AD15 AD19 AD23 AF13 AF17 AJ23 AL21 AL8 AN10 AN19 AN23 AR13 AR17 AR21 AU10 AU15 AW13 AW17 AW21 BA10 BA23 BD21 BD8 BF10 BF23 BH13 BH17 BH21 BK10 BK15 AJ10 → VDD_CPU

U0700
CAYMAN-2GB-20NM-DDR-M
CSP
SYM 8 OF 16

AB13 AB17 AB21 AB25 AB43 AB47 AB51 AB55 AD40 AD45 AD49 AD53 AF55 AJ40 AJ49 AJ53 J25 J30 J38 J43 J47 J51 L15 L19 L23 L28 L32 L36 L40 L45 L49 L53 P13 T15 T36 T40 T53 V13 V25 V34 V38 V51 V55 Y28 → VDD_GPU

1.03V @12.9A MAX
0.92V @10.7A MAX
0.80V @TBD A MAX
0.67V @TBD A MAX
PPVDD_GPU 48

C1414 15UF 20% 6.3V X5R 0402-1 ROOM=SOC
C1466 2.2UF 20% 6.3V X5R-CERM 0201 ROOM=SOC
C1448 2.2UF 20% 6.3V X5R-CERM 0201 ROOM=SOC

C1402 4.3UF 20% 4V CERM 0402 ROOM=SOC
C1409 4.3UF 20% 4V CERM 0402 ROOM=SOC
C1452 4.3UF 20% 4V CERM 0402 ROOM=SOC
C1454 4.3UF 20% 4V CERM 0402 ROOM=SOC
C1416 7.5UF 20% 4V CERM 0402 ROOM=SOC
C1421 7.5UF 20% 4V CERM 0402 ROOM=SOC
C1426 7.5UF 20% 4V CERM 0402 ROOM=SOC
C1432 7.5UF 20% 4V CERM 0402 ROOM=SOC
C1410 1UF 20% 4V CERM 0402 ROOM=SOC
C1415 1UF 20% 4V CERM 0402 ROOM=SOC
C1420 1UF 20% 4V CERM 0402 ROOM=SOC
C1425 0.47UF 20% 6.3V CERM 0402 ROOM=SOC
C1429 0.47UF 20% 6.3V CERM 0402 ROOM=SOC
C1456 0.47UF 20% 6.3V CERM 0402 ROOM=SOC
C1457 0.47UF 20% 6.3V CERM 0402 ROOM=SOC

PPVDD_S1_SOC 48
0.80V @4.1A MAX
0.67V @TBDA MAX

C1436 10UF 20% 6.3V CERM-X5R 0402-9 ROOM=SOC
C1444 10UF 20% 6.3V CERM-X5R 0402-9 ROOM=SOC
C1403 10UF 20% 6.3V CERM-X5R 0402-9 ROOM=SOC

C1465 4.3UF 20% 4V CERM 0402 ROOM=SOC
C1438 1UF 20% 4V CERM 0402 ROOM=SOC
C1440 7.5UF 20% 4V CERM 0402 ROOM=SOC
C1442 0.47UF 20% 6.3V CERM 0402 ROOM=SOC

AD28 AD32 AF60 AJ28 AJ32 AJ36 AL6 AN28 AN32 AN36 AN40 AN45 AN49 AN53 AN58 AR25 AR30 AR34 AR38 AR43 AR47 AR51 AR55 AW30 AW34 AW38 AW43 AW47 AW51 AW55 AW60 BD25 BD30 BD34 BD38 BD43 BD47 BD51 BD55 BD6 BD60 BF28 BF32 BF36 BF45 BF49 BF53 BF58 BK28 BK32 BK36 BK40 → VDD_SOC

U0700
CAYMAN-2GB-20NM-DDR-M
CSP
SYM 9 OF 16

BK45 BK49 BK53 BM55 BP15 BP19 BP23 BP28 BP32 BP36 BP40 BP45 BP49 BP53 BP58 BT13 BT17 BT21 BT25 BT30 BT34 BT38 BT43 BT47 BT51 BT55 BW10 CA13 CA17 CA21 CA25 CA30 CA34 CA38 CA43 CA47 CE13 CE17 CE45 J13 J21 J34 P55 T10 T60 V30 Y10 Y36 Y60 BF40 J60 AW25 → VDD_SOC

1.06V @1.0A MAX
0.80V @TBDA MAX

48 PPVDD_CPU_SRAM

C1407 7.5UF 20% 4V CERM 0402 ROOM=SOC
C1435 7.5UF 20% 4V CERM 0402 ROOM=SOC
C1433 7.5UF 20% 4V CERM 0402 ROOM=SOC
C1458 10UF 20% 6.3V CERM-X5R 0402-9 CRITICAL ROOM=SOC

AF8 AN15 AR8 AU19 AW8 BA15 BA19 BH8 → VDD_CPU_SRAM

1.03V @1.44A MAX
0.92V @1.50A MAX
0.80V @TBD A MAX

48 PPVDD_GPU_SRAM

C1439 7.5UF 20% 4V CERM 0402 ROOM=SOC
C1437 7.5UF 20% 4V CERM 0402 ROOM=SOC
C1459 10UF 20% 6.3V CERM-X5R 0402-9 ROOM=SOC

AF43 AF47 AF51 P17 P21 P25 P30 P34 P38 P43 P47 P51 Y15 Y19 Y23 Y40 Y45 Y49 Y53 → VDD_GPU_SRAM

VDD_CPU_SENSE	BK23	ADC_SOC_TO_PMU_VDD_CPU	39 47
VSS_CPU_SENSE	BK21	AP_VSS_CPU_SENSE	47
VDD_GPU_SENSE	AJ45	ADC_SOC_TO_PMU_VDD_GPU	39 47
VDD_SOC_SENSE	AL47	ADC_SOC_TO_PMU_VDD_SOC	39
VSS_SENSE	AJ47	AP_VSS_SENSE	47

PAGE TITLE
SOC:POWER (1/3)

SOC - POWER SUPPLIES

1.06-1.17V @0.85A MAX
PP1V1_S1_FXT_SW
C1506 10UF 20% 6.3V CERM-X5R 0402-9 ROOM=SOC
C1528 10UF 20% 6.3V CERM-X5R 0402-9 ROOM=SOC
C1518 2.2UF 20% 6.3V X5R-CERM 0201 ROOM=SOC
C1519 2.2UF 20% 6.3V X5R-CERM 0201 ROOM=SOC
C1514 2.2UF 20% 6.3V X5R-CERM 0201 ROOM=SOC
C1522 2.2UF 20% 6.3V X5R-CERM 0201 ROOM=SOC

TBD-TBDV @1.9A MAX
PPVDD_S1_FIXED
C1502 4.3UF 20% 2V CERM 0402 ROOM=SOC
C1527 1UF 20% 4V CERM 0402 ROOM=SOC
C1503 7.5UF 20% 4V CERM 0402 ROOM=SOC
C1501 10UF 20% 6.3V CERM-X5R 0402-9 ROOM=SOC

U0700
CAYMAN-2GB-20NM-DDR-M
CSP
SYM 10 OF 16

VDD_FIXED
VDD_FIXED

0.797-0.945V @9 mA MAX
AW23 VDD_FIXED_CPU

0.765-0.840V @60mA MAX
PP0V8_S2_SOC_AOP
CC36 CE30 CE40 VDD_LOW
C1504 2.2UF 20% 6.3V X5R-CERM 0201 ROOM=SOC

DDR IMPEDANCE CONTROL
PP1V1_S1_FXT_SW
R1501 240 1% 1/32W MF 01005 ROOM=SOC
R1502 240 1% 1/32W MF 01005 ROOM=SOC
R1503 240 1% 1/32W MF 01005 ROOM=SOC
R1504 240 1% 1/32W MF 01005 ROOM=SOC
R1505 240 1% 1/32W MF 01005 ROOM=SOC
R1506 240 1% 1/32W MF 01005 ROOM=SOC

U0700
CAYMAN-2GB-20NM-DDR-M
CSP
SYM 11 OF 16

VDDIO11_DDR0
VDDIO11_DDR1
VDDIO11_DDR2
VDDIO11_DDR3

DDR0_RREF CD3 DDR0_RREF
DDR1_RREF BY64 DDR1_RREF
DDR2_RREF K3 DDR2_RREF
DDR3_RREF K65 DDR3_RREF
DDR0_ZQ BN2 DDR0_ZQ
DDR3_ZQ AA66 DDR3_ZQ
DDR0_RET* CF3 GPIO_PMU_TO_SYS_SLEEP1_READY
DDR1_RET* CB65
DDR2_RET* K4
DDR3_RET* K64

VOLTAGE=1.1V
1.06 - 1.17V @4mA MAX
PP1V1_DDR_PI
FL1501 1000OHM-25%-0.12A 01005 ROOM=SOC
PP1V1_S1_FXT_SW
VDDIO11_PLL_DDR0 CE8
VDDIO11_PLL_DDR1 BW60
VDDIO11_PLL_DDR2 J8
VDDIO11_PLL_DDR3 P58
C1508 0.22UF 20% 6.3V X5R 01005-1 ROOM=SOC
C1509 0.22UF 20% 6.3V X5R 01005-1 ROOM=SOC
C1523 0.22UF 20% 6.3V X5R 01005-1 ROOM=SOC
C1510 0.22UF 20% 6.3V X5R 01005-1 ROOM=SOC

(CURRENT INCLUDED IN VDD2)
PP1V1_S2
VDDIO11_RET_DDR0 CG3
VDDIO11_RET_DDR1 CD65
VDDIO11_RET_DDR2 H4
VDDIO11_RET_DDR3 H64

DDR0_SYS_ALIVE CF4 SYSTEM_ALIVE
DDR1_SYS_ALIVE CB64
DDR2_SYS_ALIVE H3
DDR3_SYS_ALIVE H65

1.06 - 1.17V @1.74A MAX
PP1V1_S2
VDD2 AM3 AM65 BB3 BB65 BR1 BR67 BV1 BV67 BY1 BY67 C2 C66 CJ2 CJ66 CK2 CK66 D2 D66 N1 N67 R1 R67 W1 W67
C1512 10UF 20% 6.3V CERM-X5R 0402-9 ROOM=SOC
C1513 10UF 20% 6.3V CERM-X5R 0402-9 ROOM=SOC
C1507 2.2UF 20% 6.3V X5R-CERM 0201 ROOM=SOC
C1529 2.2UF 20% 6.3V X5R-CERM 0201 ROOM=SOC
C1511 2.2UF 20% 6.3V X5R-CERM 0201 ROOM=SOC
C1515 2.2UF 20% 6.3V X5R-CERM 0201 ROOM=SOC

PAGE TITLE
SOC:POWER (2/3)

SOC - POWER SUPPLIES

U0700
CAYMAN-2GB-20NM-DDR-M
CSP
SYM 13 OF 16

A12 A16 A2 A20 A24 A27 A31 A35 A5 A52 A56 A59 A63 A66 A9 AA1 AA67 AB10 AB15 AB19 AB23 AB28 AB32 AB36 AB40 AB45 AB49 AB53 AB58 AB6 AB62 AC2 AC4 AC64 AC66 AD13 AD17 AD21 AD25 AD30 AD34 AD43 AD47 AD51 AD55 AD60 AD8 AF10 AF15 AF19 AF23 AF28 AF32 AF36 AF40 AF45 AF49 AF53 AF58 AF6 AG1 AG3 AG65 AG67 AJ21 AJ25 AJ30 AJ34 AJ38 AJ43 AL10 AJ51 AJ55 AJ8 AK1 AK2 AK66 AK67 — VSS

AL23 AL28 AL32 AL36 AL40 AL45 AL53 AL58 AL62 AN13 AN17 AN21 AN25 AN30 AN34 AN38 AN43 AN47 AN51 AN55 AN60 AN8 AP1 AP4 AP64 AP67 AR10 AR15 AR19 AR28 AR32 AR36 AR40 AR45 AR49 AR53 AR58 AR6 AR62 AT1 AT3 AT65 AU13 AU17 AU21 AU25 AU30 AU34 AU38 AU43 AU47 AU51 AU55 AU60 AU8 AV1 AV2 AV4 AV64 AW10 AW15 AW19 CH50 AW28 AW32 AW36 AW40 AW45 AW49 AW53 AW58 AW6 AW62 AY1 AY4 AY64 AY67 — VSS

B1 B3 B35 B41 B46 B52 B65 B67 BA13 BA17 BA21 BA30 BA34 BA38 BA43 BA47 BA51 BA55 BA60 BA8 BC1 BC2 BC66 BC67 BD10 BD23 BD28 BD32 BD36 BD40 BD45 BD49 BD53 BD58 BD62 BF21 BF25 BF30 BF34 BF43 BF47 BF51 BF55 BF8 BG1 BG3 BG65 BG67 BH10 BH15 BH19 BH23 BH28 BH32 BH36 BH40 BH45 BH49 BH53 BH58 BH6 BH62 BK13 BK17 AL49 BK25 BK30 BK34 BK38 BK43 BK47 BK51 BK55 BK60 BK8 BL2 BL4 BL64 — VSS

U0700
CAYMAN-2GB-20NM-DDR-M
CSP
SYM 14 OF 16

BL66 BM10 BM15 BM19 BM23 BM28 BM32 BM36 BM40 BM45 BM49 BM53 BM58 BM6 BM62 BN1 BN67 BP13 BP17 BP21 BP25 BP30 BP34 BP38 BP43 BP47 BP51 BP55 BP8 BR3 BR65 BT10 BT15 BT19 BT23 BT28 BT32 BT36 BT40 BT45 BT49 BT53 BT58 BT6 BT62 BU1 BU67 BV2 BV4 BV64 BV66 BW13 BW17 BW21 BW25 BW30 BW34 BW38 BW43 BW47 BW51 CE51 BY65 C11 C14 C18 C22 C26 C29 C33 C35 C4 C52 C54 C57 C61 C64 C7 CA10 — VSS

U0700
CAYMAN-2GB-20NM-DDR-M
CSP
SYM 15 OF 16

CA15 CA19 CA23 CA28 CA32 CA36 CA40 CA45 CA49 CA53 CA58 CA6 CA62 CB1 CB3 CB66 CB67 CC13 CC17 CC21 CC30 CC34 CC38 CC43 CL22 T30 CC8 CD2 CD4 CD64 CD66 CE10 CE15 CE47 CE53 CE6 CE62 CF1 CF2 CF64 CF65 CF66 CF67 CG1 CG11 CG2 CG24 CG27 CG4 CG42 CG44 CG46 CG48 CG5 CG52 CG54 CG56 CG59 CG61 CG64 CG65 CG66 CG67 CH12 CH18 CH2 CH24 CH27 CH3 CH33 CH39 CH4 CH42 CH44 CH46 CH48 — VSS

U0700
CAYMAN-2GB-20NM-DDR-M
CSP
SYM 16 OF 16

CH5 CH52 CH54 CH56 CH59 CH61 CH63 CH64 CH65 CH66 CH7 CH9 CJ1 CJ3 CJ4 CJ41 CJ42 CJ46 CJ5 CJ50 CJ54 CJ57 CJ61 CJ64 CJ65 CJ67 CK4 CK41 CK42 CK46 CK5 CK50 CK54 CK57 CK61 CK64 CL1 CL12 CL18 CL24 CL27 CL3 CL33 CL39 CL4 CL41 CL44 CL48 CL52 CL56 CL59 CL63 CL65 CL67 CL7 CM18 CM2 CM24 CM27 CM39 CM4 CM41 CM44 CM48 CM5 CM52 CM56 CM59 CM63 CM66 D1 D11 D12 D14 D16 D18 — VSS

D20 D22 D24 D26 D27 D29 D3 D31 D35 D4 D41 D46 D5 D52 D56 D59 D63 D65 D67 D7 D9 E12 E14 E18 E2 E20 E22 E26 E27 E29 E3 E37 E4 E5 E54 E57 E59 E61 E64 E65 E66 E7 E9 F1 F2 F3 F4 F64 F65 F66 F67 G38 G43 G47 G51 G8 H1 H2 H66 H67 J10 J15 J19 J28 J32 J40 J45 J49 J53 J6 K2 K66 L13 L17 L21 L25 L30 L34 — VSS

U0700
CAYMAN-2GB-20NM-DDR-M
CSP
SYM 16 OF 16

L38 L43 L47 L51 L55 L62 L8 M1 M2 M3 M4 M64 M65 M66 M67 P10 P15 P19 P23 P28 P32 P36 P40 P45 P49 P53 P6 P62 R2 R4 R64 R66 T13 T25 T34 T38 T51 T55 U1 U67 V10 V15 V28 V32 V36 V40 V53 V58 V6 V62 W3 W65 Y13 Y17 Y21 Y25 Y30 Y43 Y47 Y51 Y55 BF38 J58 — VSS

1.70-1.95V @134mA MAX
48 PP1V8_S2

C1615 2.2UF 20% 6.3V X5R-CERM 0201 ROOM=SOC
C1605 2.2UF 20% 6.3V X5R-CERM 0201 ROOM=SOC
C1608 2.2UF 20% 6.3V X5R-CERM 0201 ROOM=SOC
C1612 2.2UF 20% 6.3V X5R-CERM 0201 ROOM=SOC

U0700
CAYMAN-2GB-20NM-DDR-M
CSP
SYM 12 OF 16

AM1 AM67 BB1 BB67 C3 C65 CK3 CK65 — VDD1

1.62-1.98V @43mA MAX
48 PP1V8_EXT_SW1

C1602 100UF 20% 6.3V CERM-X5R 0402-9 ROOM=SOC
C1607 2.2UF 20% 6.3V X5R-CERM 0201 ROOM=SOC
C1610 2.2UF 20% 6.3V X5R-CERM 0201 ROOM=SOC
C1614 2.2UF 20% 6.3V X5R-CERM 0201 ROOM=SOC

AJ62 AN62 AU62 BA62 BF62 — VDDIO18_GRP1

G40 G45 G49 G53 — VDDIO18_GRP2

AD6 AJ6 AN6 BA6 BF6 — VDDIO18_GRP3

CE19 CE23 — VDDIO18_GRP4

48 PP1V8_S2_SW3

C1603 2.2UF 20% 6.3V X5R-CERM 0201 ROOM=SOC
C1601 0.1UF 20% 6.3V X5R-CERM 01005 ROOM=SOC

1.62-1.98V @10mA MAX

CE28 CE32 CE34 CE36 CE43 CE38 — VDDIO18_GRP10

R1650 100 1% 1/32W MF 01005

1.62-1.98V @2mA MAX

PP1V8_S2_LPOSC

CRITICAL
C1650 4UF 20% 6.3V CER-X5R 0201 ROOM=SOC
C1651 56PF 5% 16V NP0-C0G 01005 ROOM=SOC

VOLTAGE=1.8V

AR23 BK19 AF21 J36 CE21 BF60 — VDD18_TSADC0 VDD18_TSADC1 VDD18_TSADC2 VDD18_TSADC3 VDD18_TSADC4 VDD18_TSADC5

1.62-1.98V @1mA MAX — CG9 VDD18_FMON

1.62-1.98V @1mA MAX — CC40 VDD18_LPOSC

48 PP1V2_BUFF

TBD-TBDV @30mA MAX

C1611 0.1UF 10% 6.3V CERM-X5R 0201 ROOM=SOC

AU23 T28 Y38 — VDD12_CPU_UVD VDD12_GPU_UVD VDD12_SOC_UVD

BA25 — VDD12_PLL_CPU

48 PP1V2_SOC

R1602 0.00 0% 1/32W MF 01005 ROOM=SOC

VDD12_PLL_CPU:1.14-1.26V @13mA MAX
PP1V2_PLL_CPU
VOLTAGE=1.2V

C1606 0.1UF 20% 6.3V X5R-CERM 01005 ROOM=SOC

Y32 AD36 AD38 Y34 — VDD12_PLL_SOC

R1601 0.00 0% 1/32W MF 01005 ROOM=SOC

VDD12_PLL_SOC:1.14-1.26V @31mA MAX
PP1V2_PLL_SOC
VOLTAGE=1.2V

C1604 2.2UF 20% 6.3V X5R-CERM 0201 ROOM=SOC
C1609 0.1UF 20% 6.3V X5R-CERM 01005 ROOM=SOC
C1613 0.1UF 20% 6.3V X5R-CERM 01005 ROOM=SOC

CKPLUS_WAIVE=PWRTERM2GND
CKPLUS_WAIVE=PWRTERM3GND
VDD18_EFUSE1 — CG7
VDD18_EFUSE2 — G34

PAGE TITLE
SOC:POWER (3/3)

TRISTAR

343S0605 = TRISTAR 2, A3
343S0658 = TRISTAR 2, A1

998-5855 = TRISTAR 2, TC
343S0639 = TRISTAR 2, A0

343S0614 = TRISTAR 1

NOTE: A2 ONLY USED ON IPHONES

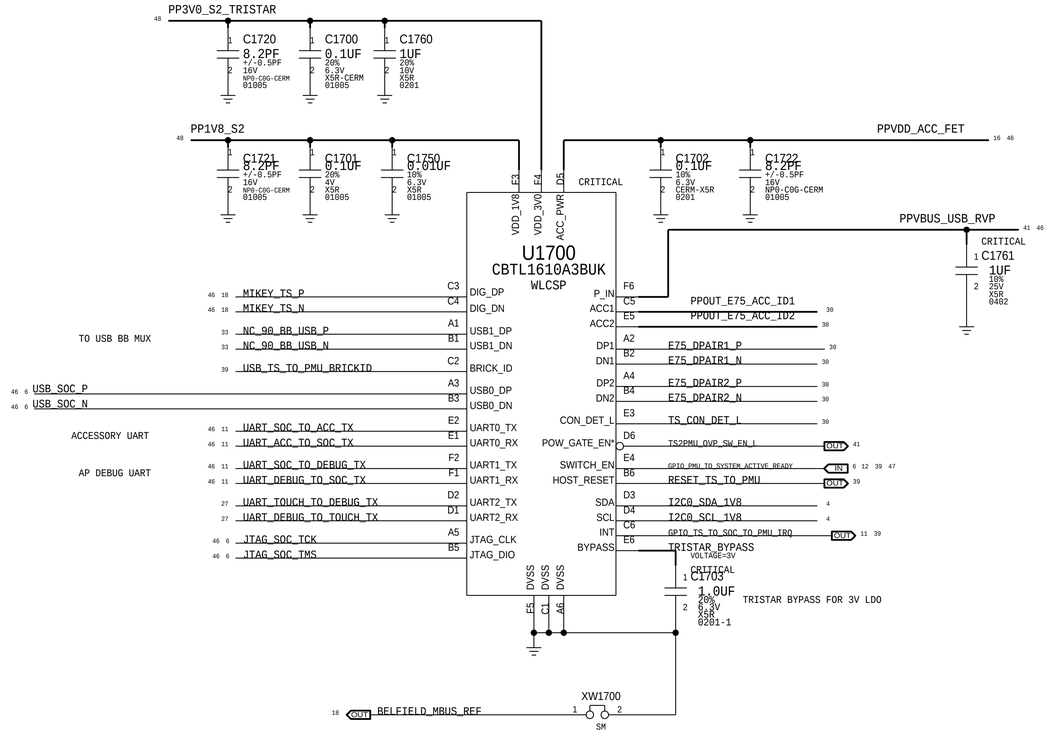

SYNC_MASTER=JAMES_MLBB1 SYNC_DATE=12/20/2017

PAGE TITLE

IO: TRISTAR

HP JACK B2B CONNECTOR

J1800 MATCHES AUDIO_JACK_FLEX_3.0.0 1/9/13

MLB: 516S1084
FLEX: 516S1085

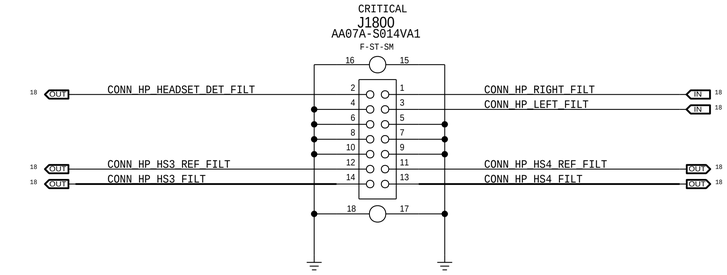

DMIC FILTERS

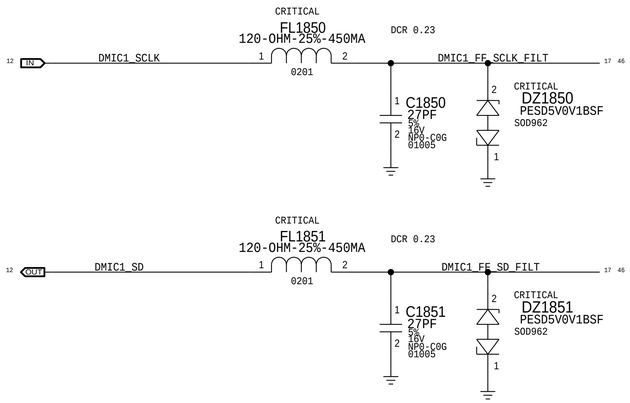

MICROPHONE FLEX B2B CONNECTOR

J1810 MATCHES MIC_FLEX_2.0.0 1/7/13

MLB APN: 516S0899
FLEX APN: 516S0900

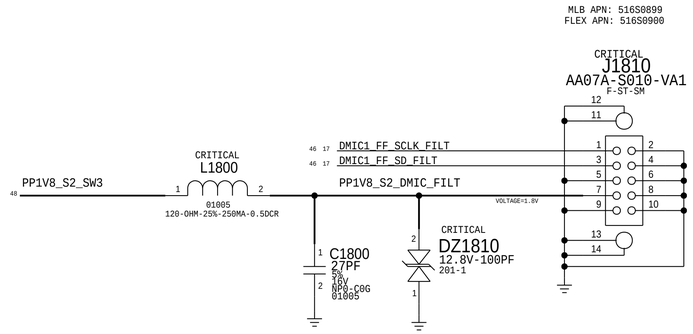

PART NUMBER	ALTERNATE FOR PART NUMBER	BOM OPTION	REF DES	COMMENTS:
377S0077	377S0111			

DZ1850,DZ1851

SYNC_MASTER=JAMES_MLBB1 SYNC_DATE=12/20/2017

PAGE TITLE

AUDIO: HP/DMIC FLEX CONNS

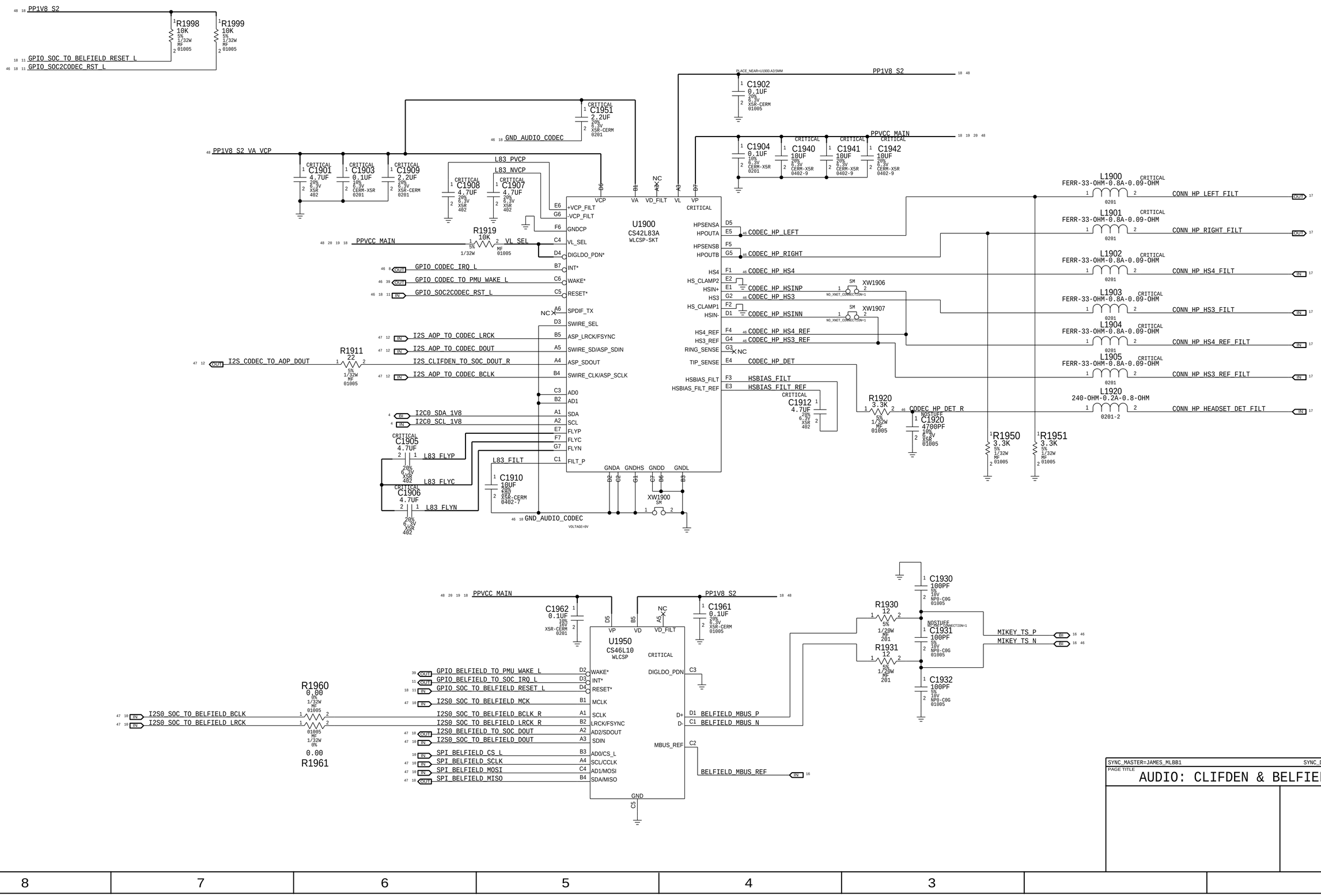
PP1V8_S2
R1998 10K 5% 1/32W MF 01005
R1999 10K 5% 1/32W MF 01005
GPIO_SOC_TO_BELFIELD_RESET_L
GPIO_SOC2CODEC_RST_L
PLACE_NEAR=U1900.A3:5MM
C1902 0.1UF 20% 6.3V X5R-CERM 01005
C1904 0.1UF 10% 6.3V CERM-X5R 0201
C1940 10UF 20% 6.3V CERM-X5R 0402-9
C1941 10UF 20% 6.3V CERM-X5R 0402-9
C1942 10UF 20% 6.3V CERM-X5R 0402-9
PPVCC_MAIN
C1951 2.2UF 20% 6.3V X5R-CERM 0201
GND_AUDIO_CODEC
PP1V8_S2_VA_VCP
C1901 4.7UF 20% 6.3V X5R 402
C1903 0.1UF 10% 6.3V CERM-X5R 0201
C1909 2.2UF 20% 6.3V X5R-CERM 0201
L83_PVCP
L83_NVCP
C1908 4.7UF 20% 6.3V X5R 402
C1907 4.7UF 20% 6.3V X5R 402
R1919 10K 5% 1/32W MF 01005
VL_SEL
U1900
CS42L83A
WLCSP-SKT
VCP VA VD_FILT VL VP
+VCP_FILT -VCP_FILT GNDCP VL_SEL DIGLDO_PDN* INT* WAKE* RESET* SPDIF_TX SWIRE_SEL ASP_LRCK/FSYNC SWIRE_SD/ASP_SDIN ASP_SDOUT SWIRE_CLK/ASP_SCLK AD0 AD1 SDA SCL FLYP FLYC FLYN FILT_P
GPIO_CODEC_IRQ_L
GPIO_CODEC_TO_PMU_WAKE_L
GPIO_SOC2CODEC_RST_L
I2S_AOP_TO_CODEC_LRCK
I2S_AOP_TO_CODEC_DOUT
I2S_CODEC_TO_AOP_DOUT
I2S_CLIFDEN_TO_SOC_DOUT_R
I2S_AOP_TO_CODEC_BCLK
R1911 22 5% 1/32W MF 01005
I2C0_SDA_1V8
I2C0_SCL_1V8
C1905 4.7UF 20% 6.3V X5R 402
C1906 4.7UF 20% 6.3V X5R 402
L83_FLYP
L83_FLYC
L83_FLYN
L83_FILT
C1910 10UF 20% 10V X5R-CERM 0402-7
GNDA GNDHS GNDD GNDL
XW1900 SM
GND_AUDIO_CODEC
VOLTAGE=0V
HPSENSA HPOUTA HPSENSB HPOUTB HS4 HS_CLAMP2 HSIN+ HS3 HS_CLAMP1 HSIN- HS4_REF HS3_REF RING_SENSE TIP_SENSE HSBIAS_FILT HSBIAS_FILT_REF
CODEC_HP_LEFT
CODEC_HP_RIGHT
CODEC_HP_HS4
CODEC_HP_HSINP
CODEC_HP_HS3
CODEC_HP_HSINN
CODEC_HP_HS4_REF
CODEC_HP_HS3_REF
CODEC_HP_DET
HSBIAS_FILT
HSBIAS_FILT_REF
C1912 4.7UF 20% 6.3V X5R 402
XW1906 SM NO_XNET_CONNECTION=1
XW1907 SM NO_XNET_CONNECTION=1
R1920 3.3K 5% 1/32W MF 01005
NOSTUFF C1920 4700PF 10% 10V X5R 01005
R1950 3.3K 5% 1/32W MF 01005
R1951 3.3K 5% 1/32W MF 01005
L1900 FERR-33-OHM-0.8A-0.09-OHM 0201 CONN_HP_LEFT_FILT
L1901 FERR-33-OHM-0.8A-0.09-OHM 0201 CONN_HP_RIGHT_FILT
L1902 FERR-33-OHM-0.8A-0.09-OHM 0201 CONN_HP_HS4_FILT
L1903 FERR-33-OHM-0.8A-0.09-OHM 0201 CONN_HP_HS3_FILT
L1904 FERR-33-OHM-0.8A-0.09-OHM 0201 CONN_HP_HS4_REF_FILT
L1905 FERR-33-OHM-0.8A-0.09-OHM 0201 CONN_HP_HS3_REF_FILT
L1920 240-OHM-0.2A-0.8-OHM 0201-2 CONN_HP_HEADSET_DET_FILT
PPVCC_MAIN
PP1V8_S2
C1962 0.1UF 10% 6.3V X5R-CERM 0201
C1961 0.1UF 20% 6.3V X5R-CERM 01005
U1950
CS46L10
WLCSP
VP VD VD_FILT
GPIO_BELFIELD_TO_PMU_WAKE_L
GPIO_BELFIELD_TO_SOC_IRQ_L
GPIO_SOC_TO_BELFIELD_RESET_L
I2S0_SOC_TO_BELFIELD_MCK
I2S0_SOC_TO_BELFIELD_BCLK
I2S0_SOC_TO_BELFIELD_LRCK
R1960 0.00 5% 1/32W MF 01005
R1961 0.00 5% 1/32W MF 01005
I2S0_SOC_TO_BELFIELD_BCLK_R
I2S0_SOC_TO_BELFIELD_LRCK_R
I2S0_BELFIELD_TO_SOC_DOUT
I2S0_SOC_TO_BELFIELD_DOUT
SPI_BELFIELD_CS_L
SPI_BELFIELD_SCLK
SPI_BELFIELD_MOSI
SPI_BELFIELD_MISO
WAKE* INT* RESET* MCLK SCLK LRCK/FSYNC AD2/SDOUT SDIN AD0/CS_L SCL/CCLK AD1/MOSI SDA/MISO
DIGLDO_PDN
MBUS_REF
BELFIELD_MBUS_P
BELFIELD_MBUS_N
BELFIELD_MBUS_REF
R1930 12 5% 1/20W MF 201
R1931 12 5% 1/20W MF 201
C1930 100PF 5% 10V NP0-C0G 01005
NOSTUFF C1931 100PF 5% 10V NP0-C0G 01005
C1932 100PF 5% 10V NP0-C0G 01005
MIKEY_TS_P
MIKEY_TS_N
SYNC_MASTER=JAMES_MLBB1
SYNC_DATE=12/20/2017
PAGE TITLE
AUDIO: CLIFDEN & BELFIELD

SPEAKER AMPLIFIERS

APN:353S4265

TDM CHANNEL 1

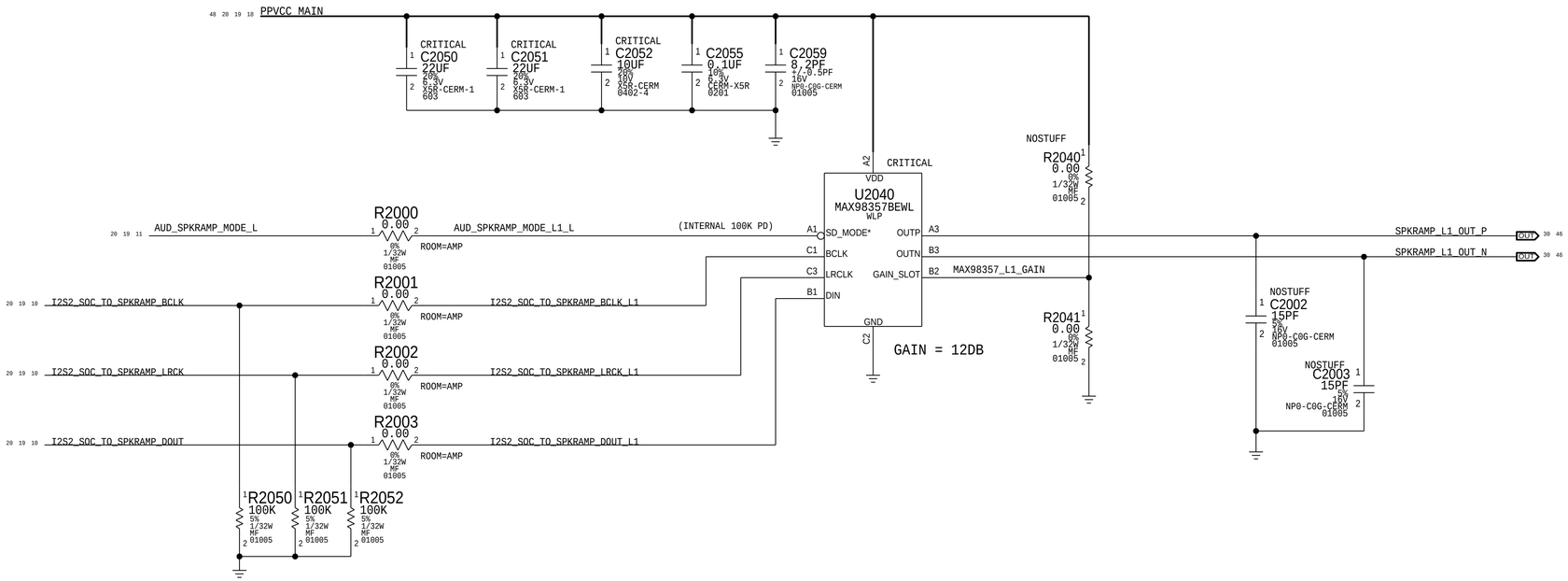

SD_MODE#	TDM CHANNEL	GAIN_SLOT
H	1	PULLED TO GND
H	2	PULLED WITH 0-OHM TO VDD
H	3	FLOAT
H	4	PULLED WITH 100K-OHM TO VDD

TDM CHANNEL 2

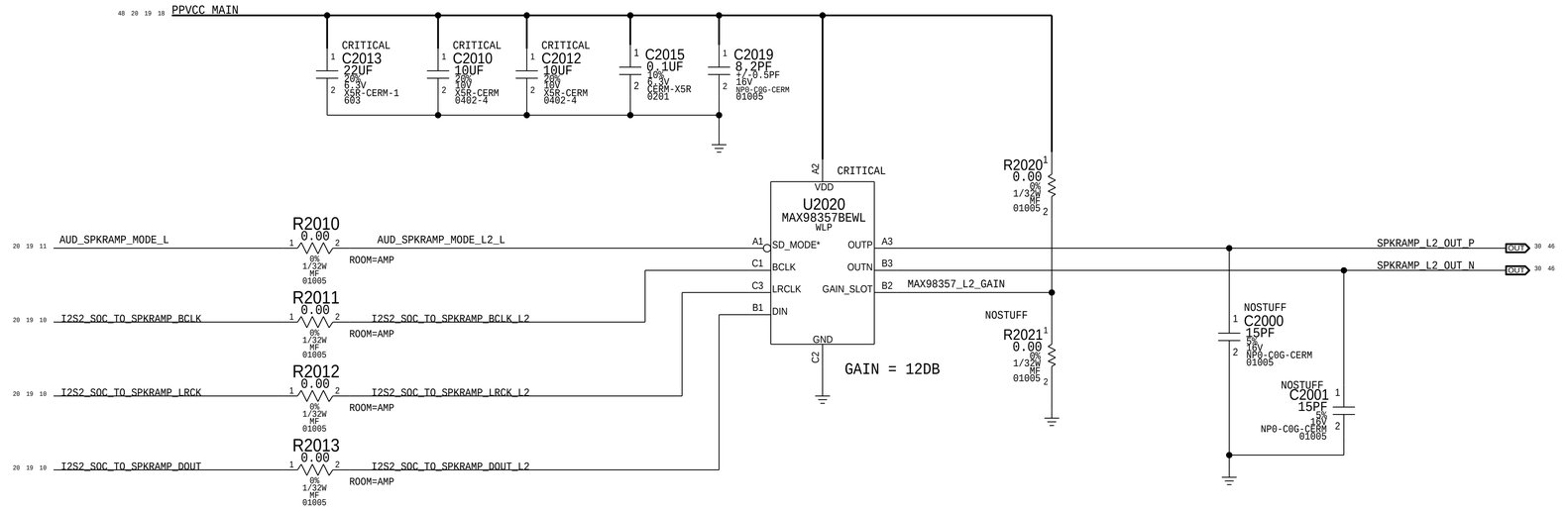

SYNC_MASTER=JAMES_MLBB1 SYNC_DATE=12/20/2017

PAGE TITLE

AUDIO: SPEAKER AMPS LEFT

SPEAKER AMPLIFIERS

APN:353S4265

TDM CHANNEL 3

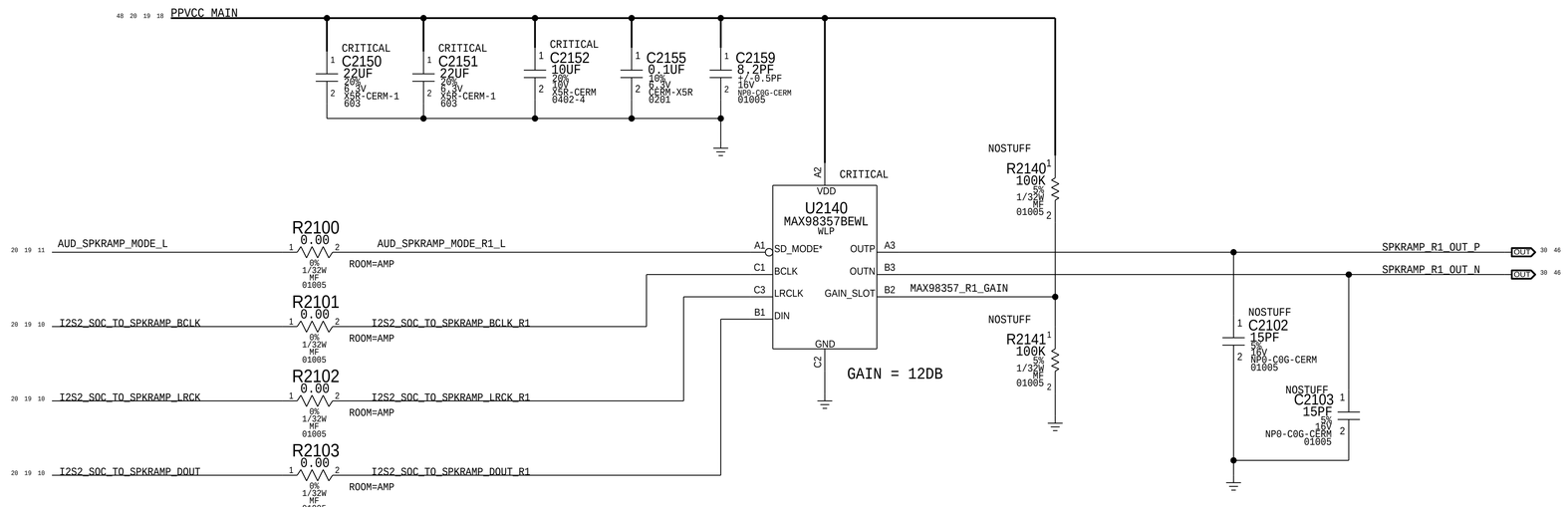

SD_MODE#	TDM CHANNEL	GAIN_SLOT
H	1	PULLED TO GND
H	2	PULLED WITH 0-OHM TO VDD
H	3	FLOAT
H	4	PULLED WITH 100K-OHM TO VDD

TDM CHANNEL 4

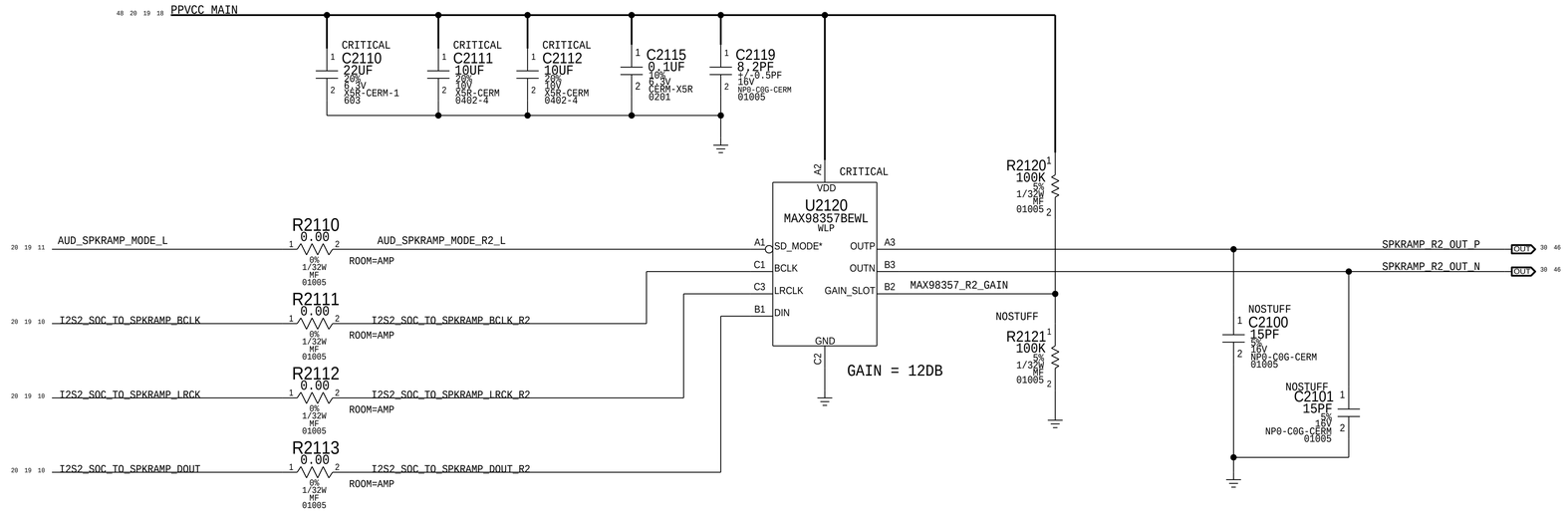

SYNC_MASTER=JAMES_MLBB1 SYNC_DATE=12/20/2017

PAGE TITLE

AUDIO: SPEAKER AMPS RIGHT

MESA SUPPORT

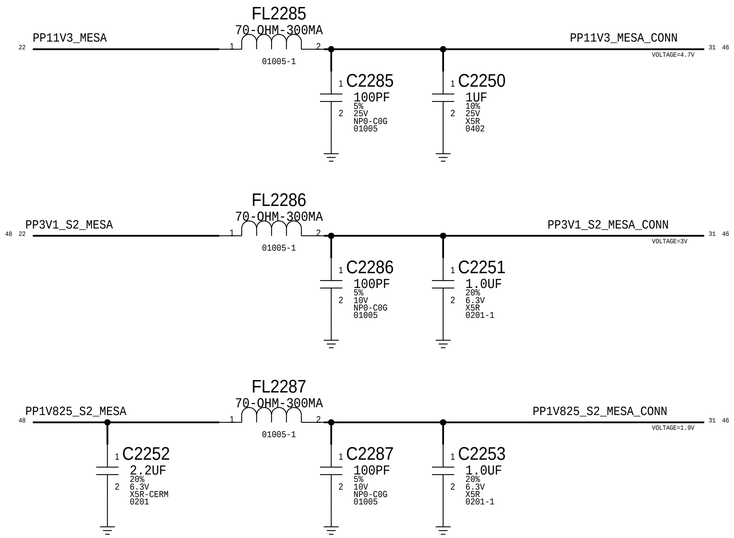

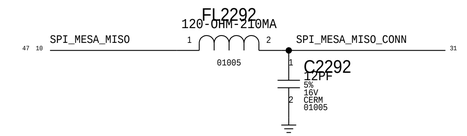

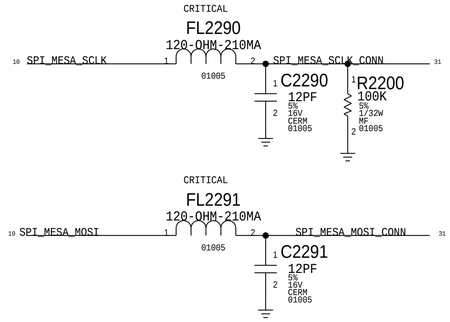

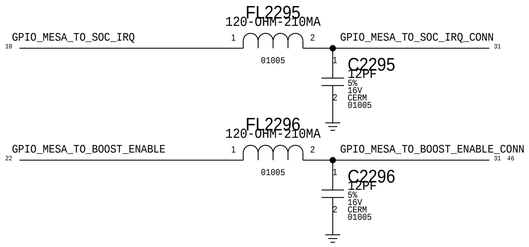

SYNC_MASTER=JAMES_MLBB1 SYNC_DATE=12/20/2017

PAGE TITLE

SENSOR: MESA SUPPORT

MOJAVE (BOOST)

APN: 353S4207
VENDOR: TI

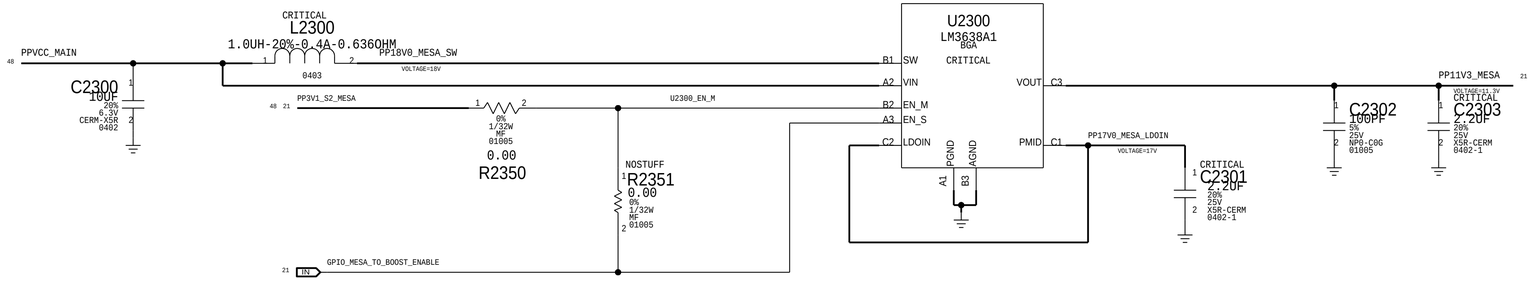

SYNC_MASTER=JAMES_MLBB1	SYNC_DATE=12/20/2017
PAGE TITLE	
SENSOR: MESA BOOST	

PHOSPHORUS

APN 338S00334

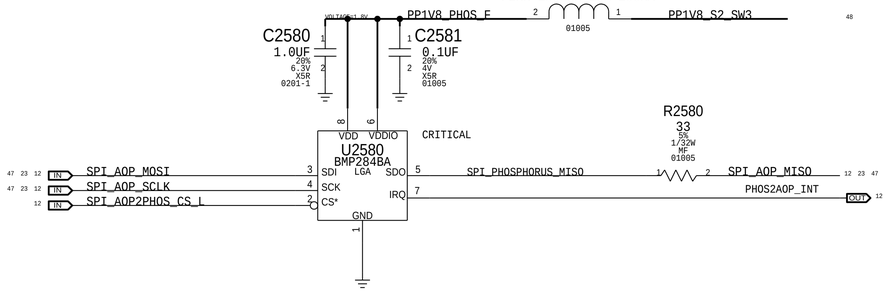

CARBON

(ACCEL-GYRO COMBO)

INVENSENSE (MPU-6900) APN 338S00226

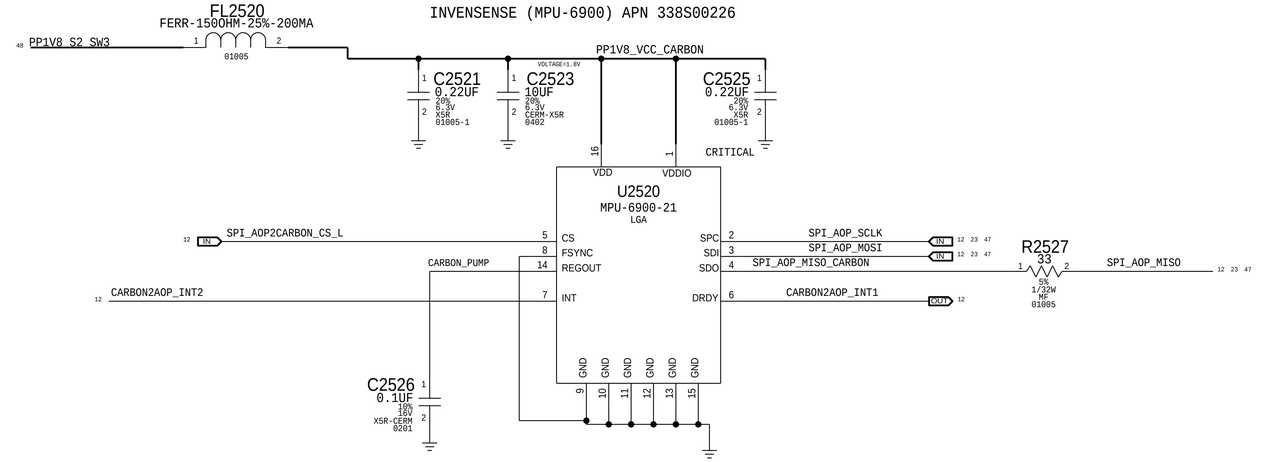

HALL EFFECT

BIPOLAR ONE OUTPUT APN 353S3687

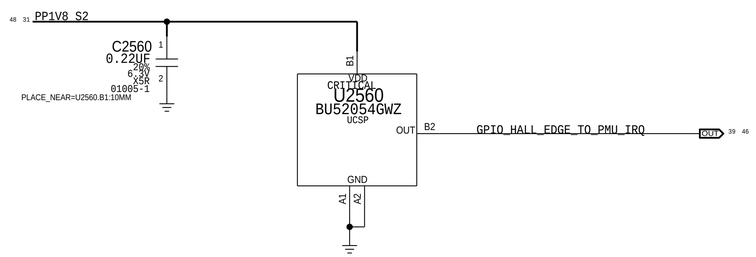

COMPASS

APN 338S00282

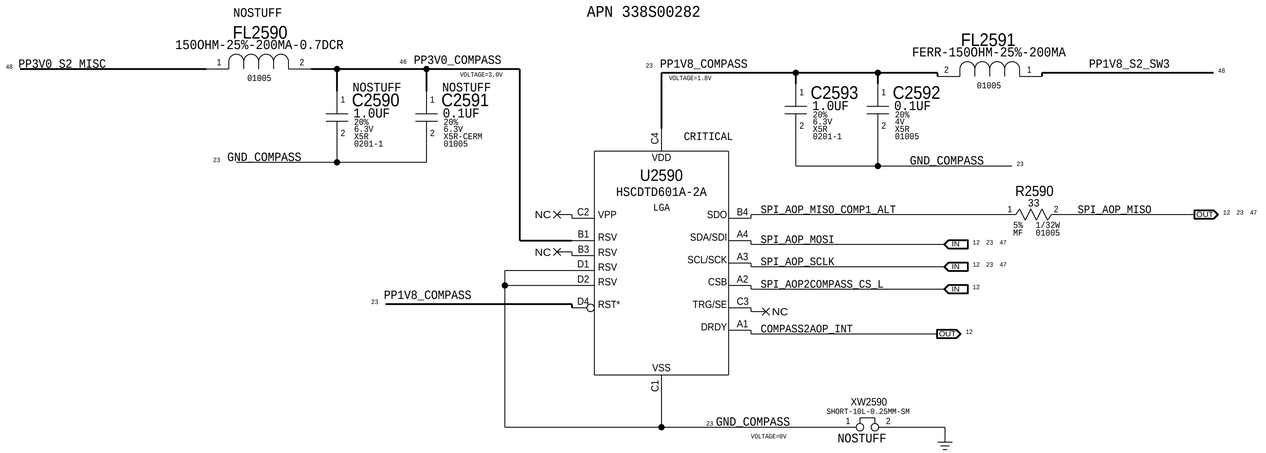

SYNC_MASTER=JAMES_MLBB1 SYNC_DATE=12/20/2017

PAGE TITLE

SENSOR: HALL, CARBON, COMPASS, PHOS

BUTTON CONNECTOR

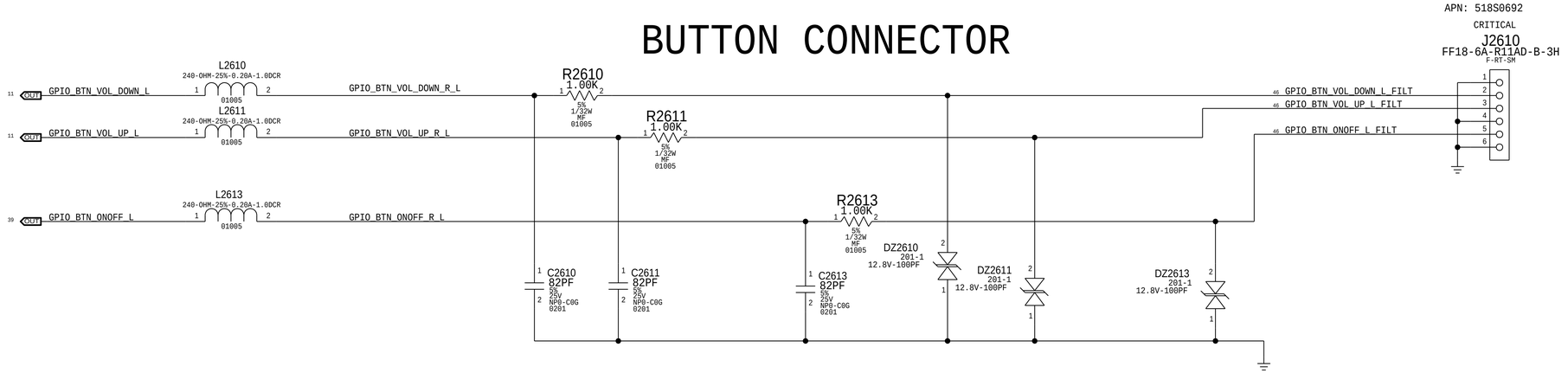

SYNC_MASTER=JAMES_MLBB1	SYNC_DATE=12/20/2017
PAGE TITLE	IO: BUTTON FLEX CONN

FRONT CAMERA CONNECTOR

J65 CAMERA CONNECTOR

APN:MLB 516S0876
APN:FLEX 516S0869

CRITICAL
J2700
503548-1820
F-ST-SM

20 19
22 21

25	CAM_ALS_SCL_1V8_F	2	1	CAM_ALS_SDA_1V8_F	25
25	GPIO_CAM_ALS2SOC_IRQ_L_F	4	3	ISP1_CAM_FRONT_CLK_F	25 46
25	PP3V0_ALS_FILT	6	5		
		8	7	ISP1_CAM_FRONT_SHUTDOWN_L_F	25 46
47 25	MIPI1C_CAM_FRONT_DATA_FILT_P<0>	10	9	ISP1_CAM_FRONT_SDA_F	25 46
47 25	MIPI1C_CAM_FRONT_DATA_FILT_N<0>	12	11	ISP1_CAM_FRONT_SCL_F	25 46
		14	13	PP2V9_AVDD_CAM_FRONT_FILT	25 46
47 25	MIPI1C_CAM_FRONT_CLK_FILT_P	16	15	GND_AVDD_CAM_FRONT	25
47 25	MIPI1C_CAM_FRONT_CLK_FILT_N	18	17	PP1V8_CAM_FRONT_FILT	25 46

GND_VOID=TRUE

L2780
80-OHM-25%-500MA
0201
VOLTAGE=1.8V
48 PP1V8_SW1 → PP1V8_CAM_FRONT_FILT 25 46
C2780 100PF 5% 16V NP0-C0G 01005
C2781 1.0UF 20% 6.3V X5R 0201-1
XW2780 SM GND_PP1V8_CAM_FRONT VOLTAGE=0V
XW2781 SM

L2700
80-OHM-25%-500MA
0201
VOLTAGE=2.9V
48 PP2V9_CAM → PP2V9_AVDD_CAM_FRONT_FILT 25 46
C2700 100PF 5% 16V NP0-C0G 01005
C2701 1.0UF 20% 6.3V X5R 0201-1
XW2700 SM GND_PP2V9_CAM_FRONT VOLTAGE=0V
XW2701 SM GND_AVDD_CAM_FRONT VOLTAGE=0V 25

L2702
80-OHM-25%-500MA
0201
VOLTAGE=3.0V
42 PP3V0_ALS → PP3V0_ALS_FILT 25
C2706 100PF 5% 16V NP0-C0G 01005
C2707 1.0UF 20% 6.3V X5R 0201-1

CRITICAL
L2710
47 25 MIPI1C_CAM_FRONT_CLK_FILT_P 2 → 3 MIPI1C_CAM_FRONT_CLK_P OUT 8 47
47 25 MIPI1C_CAM_FRONT_CLK_FILT_N 1 → 4 MIPI1C_CAM_FRONT_CLK_N OUT 8 47
GND_VOID=TRUE
EXCX42CE
90-OHM-0.1A

CRITICAL
L2711
47 25 MIPI1C_CAM_FRONT_DATA_FILT_P<0> 2 → 3 MIPI1C_CAM_FRONT_DATA_P<0> OUT 8 47
47 25 MIPI1C_CAM_FRONT_DATA_FILT_N<0> 1 → 4 MIPI1C_CAM_FRONT_DATA_N<0> OUT 8 47
GND_VOID=TRUE
EXCX42CE
90-OHM-0.1A

FL2730
70-OHM-300MA
01005-1
DCR 0.45
4 IN I2C2_SCL_1V8 → CAM_ALS_SCL_1V8_F 25
C2730 27PF 5% 16V NP0-C0G 01005

FL2731
70-OHM-300MA
01005-1
DCR 0.45
4 IN I2C2_SDA_1V8 → CAM_ALS_SDA_1V8_F 25
C2731 27PF 5% 16V NP0-C0G 01005

FL2740
70-OHM-300MA
01005-1
DCR 0.45
8 IN ISP1_CAM_FRONT_SHUTDOWN_L → ISP1_CAM_FRONT_SHUTDOWN_L_F 25 46
R2740 100K 5% 1/32W MF 01005
C2740 27PF 5% 16V NP0-C0G 01005

FL2750
70-OHM-300MA
01005-1
DCR 0.45
8 IN ISP1_CAM_FRONT_SCL → ISP1_CAM_FRONT_SCL_F 25 46
C2750 27PF 5% 16V NP0-C0G 01005

FL2751
70-OHM-300MA
01005-1
DCR 0.45
8 IN ISP1_CAM_FRONT_SDA → ISP1_CAM_FRONT_SDA_F 25 46
C2751 27PF 5% 16V NP0-C0G 01005

CRITICAL
FL2760
FERR-150OHM-25%-200MA
01005
DCR 0.70
8 IN ISP1_CAM_FRONT_CLK → ISP1_CAM_FRONT_CLK_F 25 46
C2760 56PF 5% 16V NP0-C0G 01005

FL2770
70-OHM-300MA
01005-1
DCR 0.45
11 IN GPIO_ALS1_IRQ_L → GPIO_CAM_ALS2SOC_IRQ_L_F 25

SYNC_MASTER=JAMES_MLBB1 SYNC_DATE=12/20/2017
PAGE TITLE
CAMERA: FF AND ALS CONN

REAR CAMERA CONNECTOR

CRITICAL
U2900
400MHZ-0.1A-27PF
1208
ISP0_CAM_REAR_CLK
ISP0_CAM_REAR_SHUTDOWN_L
ISP0_CAM_REAR_SDA
ISP0_CAM_REAR_SCL
ISP0_CAM_REAR_SHUTDOWN_FILT_L
ISP0_CAM_REAR_SDA_FILT
ISP0_CAM_REAR_SCL_FILT
GND

APN: 516S00073
PLUG: 516S0750
CRITICAL
J2950
AA07A-S026VA1
F-ST-SM1

L2950
FERR-150OHM-25%-200MA
01005
ISP0_CAM_REAR_CLK_LC
ISP0_CAM_REAR_CLK_F

ISP0_CAM_REAR_SHUTDOWN_FILT_L
ISP0_CAM_REAR_SDA_FILT
ISP0_CAM_REAR_SCL_FILT
PP1V8_CAM_REAR_FILT
PP2V6_CAM_REAR_AF_FILT
PP1V25_CAM_REAR_FILT

R2950
100K
5%
1/32W
MF
01005

PP2V9_AVDD_CAM_REAR_FILT

CRITICAL
L2913
MIPI0C_CAM_REAR_DATA_N<3>
MIPI0C_CAM_REAR_DATA_P<3>
MIPI0C_CAM_REAR_DATA_FILT_N<3>
MIPI0C_CAM_REAR_DATA_FILT_P<3>
EXC4CE
90-OHM-0.1A

CRITICAL
L2910
MIPI0C_CAM_REAR_DATA_FILT_N<0>
MIPI0C_CAM_REAR_DATA_FILT_P<0>
MIPI0C_CAM_REAR_DATA_N<0>
MIPI0C_CAM_REAR_DATA_P<0>
EXC4CE
90-OHM-0.1A

CRITICAL
L2911
MIPI0C_CAM_REAR_DATA_FILT_N<1>
MIPI0C_CAM_REAR_DATA_FILT_P<1>
MIPI0C_CAM_REAR_DATA_N<1>
MIPI0C_CAM_REAR_DATA_P<1>
EXC4CE
90-OHM-0.1A

CRITICAL
L2920
MIPI0C_CAM_REAR_CLK_FILT_N
MIPI0C_CAM_REAR_CLK_FILT_P
MIPI0C_CAM_REAR_CLK_N
MIPI0C_CAM_REAR_CLK_P
EXC4CE
90-OHM-0.1A

CRITICAL
L2912
MIPI0C_CAM_REAR_DATA_FILT_N<2>
MIPI0C_CAM_REAR_DATA_FILT_P<2>
MIPI0C_CAM_REAR_DATA_N<2>
MIPI0C_CAM_REAR_DATA_P<2>
EXC4CE
90-OHM-0.1A

L2900
80-OHM-25%-0.5A-0.13DCR
0201
PP2V9_CAM
PP2V9_AVDD_CAM_REAR_FILT
VOLTAGE=2.9V
C2900 56PF 5% 16V NP0-C0G 01005
C2901 1.0UF 20% 6.3V X5R 0201-1
C2902 1000PF 10% 6.3V X5R-CERM 01005

L2902
80-OHM-25%-0.5A-0.13DCR
0201
PP1V8_SW1
PP1V8_CAM_REAR_FILT
VOLTAGE=1.8V
C2906 56PF 5% 16V NP0-C0G 01005
C2907 1.0UF 20% 6.3V X5R 0201-1
C2908 1000PF 10% 6.3V X5R-CERM 01005

L2903
80-OHM-25%-0.5A-0.13DCR
0201
PP1V25_REAR_CAM
PP1V25_CAM_REAR_FILT
VOLTAGE=1.25V
C2909 56PF 5% 16V NP0-C0G 01005
C2910 1.0UF 20% 6.3V X5R 0201-1
C2911 1000PF 10% 6.3V X5R-CERM 01005

L2901
80-OHM-25%-0.5A-0.13DCR
0201
PP2V6_CAM_REAR_AF_FILT
VOLTAGE=2.6V
PP2V6_CAM_AF
C2903 56PF 5% 16V NP0-C0G 01005
C2904 1.0UF 20% 6.3V X5R 0201-1
C2905 1000PF 10% 6.3V X5R-CERM 01005

SYNC_MASTER=JAMES_MLBB1
SYNC_DATE=12/20/2017
PAGE TITLE
CAMERA: REAR CONN & FILTERS

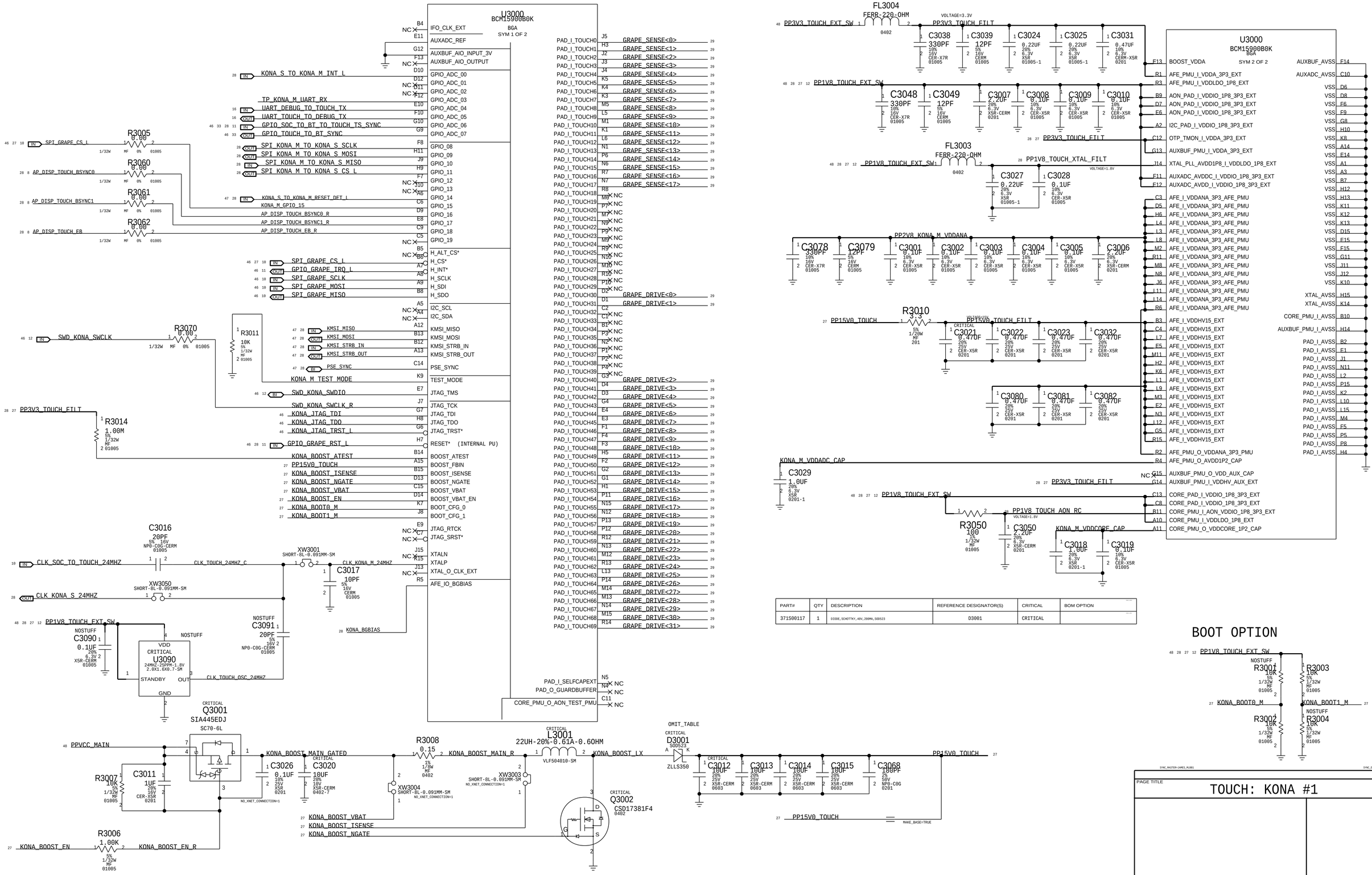
U3000
BCM15900B0K
BGA
SYM 1 OF 2
IFO_CLK_EXT
AUXADC_REF
AUXBUF_AIO_INPUT_3V
AUXBUF_AIO_OUTPUT
GPIO_ADC_00
GPIO_ADC_01
GPIO_ADC_02
GPIO_ADC_03
GPIO_ADC_04
GPIO_ADC_05
GPIO_ADC_06
GPIO_ADC_07
GPIO_08
GPIO_09
GPIO_10
GPIO_11
GPIO_12
GPIO_13
GPIO_14
GPIO_15
GPIO_16
GPIO_17
GPIO_18
GPIO_19
H_ALT_CS*
H_CS*
H_INT*
H_SCLK
H_SDI
H_SDO
I2C_SCL
I2C_SDA
KMSI_MISO
KMSI_MOSI
KMSI_STRB_IN
KMSI_STRB_OUT
PSE_SYNC
TEST_MODE
JTAG_TMS
JTAG_TCK
JTAG_TDI
JTAG_TDO
JTAG_TRST*
RESET* (INTERNAL PU)
BOOST_ATEST
BOOST_FBIN
BOOST_ISENSE
BOOST_NGATE
BOOST_VBAT
BOOST_VBAT_EN
BOOT_CFG_0
BOOT_CFG_1
JTAG_RTCK
JTAG_SRST*
XTALN
XTALP
XTAL_O_CLK_EXT
AFE_IO_BGBIAS
PAD_I_SELFCAPEXT
PAD_O_GUARDBUFFER
CORE_PMU_O_AON_TEST_PMU
PAD_I_TOUCH0
PAD_I_TOUCH1
PAD_I_TOUCH2
PAD_I_TOUCH3
PAD_I_TOUCH4
PAD_I_TOUCH5
PAD_I_TOUCH6
PAD_I_TOUCH7
PAD_I_TOUCH8
PAD_I_TOUCH9
PAD_I_TOUCH10
PAD_I_TOUCH11
PAD_I_TOUCH12
PAD_I_TOUCH13
PAD_I_TOUCH14
PAD_I_TOUCH15
PAD_I_TOUCH16
PAD_I_TOUCH17
PAD_I_TOUCH18
PAD_I_TOUCH19
PAD_I_TOUCH20
PAD_I_TOUCH21
PAD_I_TOUCH22
PAD_I_TOUCH23
PAD_I_TOUCH24
PAD_I_TOUCH25
PAD_I_TOUCH26
PAD_I_TOUCH27
PAD_I_TOUCH28
PAD_I_TOUCH29
PAD_I_TOUCH30
PAD_I_TOUCH31
PAD_I_TOUCH32
PAD_I_TOUCH33
PAD_I_TOUCH34
PAD_I_TOUCH35
PAD_I_TOUCH36
PAD_I_TOUCH37
PAD_I_TOUCH38
PAD_I_TOUCH39
PAD_I_TOUCH40
PAD_I_TOUCH41
PAD_I_TOUCH42
PAD_I_TOUCH43
PAD_I_TOUCH44
PAD_I_TOUCH45
PAD_I_TOUCH46
PAD_I_TOUCH47
PAD_I_TOUCH48
PAD_I_TOUCH49
PAD_I_TOUCH50
PAD_I_TOUCH51
PAD_I_TOUCH52
PAD_I_TOUCH53
PAD_I_TOUCH54
PAD_I_TOUCH55
PAD_I_TOUCH56
PAD_I_TOUCH57
PAD_I_TOUCH58
PAD_I_TOUCH59
PAD_I_TOUCH60
PAD_I_TOUCH61
PAD_I_TOUCH62
PAD_I_TOUCH63
PAD_I_TOUCH64
PAD_I_TOUCH65
PAD_I_TOUCH66
PAD_I_TOUCH67
PAD_I_TOUCH68
PAD_I_TOUCH69
GRAPE_SENSE<0>
GRAPE_SENSE<1>
GRAPE_SENSE<2>
GRAPE_SENSE<3>
GRAPE_SENSE<4>
GRAPE_SENSE<5>
GRAPE_SENSE<6>
GRAPE_SENSE<7>
GRAPE_SENSE<8>
GRAPE_SENSE<9>
GRAPE_SENSE<10>
GRAPE_SENSE<11>
GRAPE_SENSE<12>
GRAPE_SENSE<13>
GRAPE_SENSE<14>
GRAPE_SENSE<15>
GRAPE_SENSE<16>
GRAPE_SENSE<17>
GRAPE_DRIVE<0>
GRAPE_DRIVE<1>
GRAPE_DRIVE<2>
GRAPE_DRIVE<3>
GRAPE_DRIVE<4>
GRAPE_DRIVE<5>
GRAPE_DRIVE<6>
GRAPE_DRIVE<7>
GRAPE_DRIVE<8>
GRAPE_DRIVE<9>
GRAPE_DRIVE<10>
GRAPE_DRIVE<11>
GRAPE_DRIVE<12>
GRAPE_DRIVE<13>
GRAPE_DRIVE<14>
GRAPE_DRIVE<15>
GRAPE_DRIVE<16>
GRAPE_DRIVE<17>
GRAPE_DRIVE<18>
GRAPE_DRIVE<19>
GRAPE_DRIVE<20>
GRAPE_DRIVE<21>
GRAPE_DRIVE<22>
GRAPE_DRIVE<23>
GRAPE_DRIVE<24>
GRAPE_DRIVE<25>
GRAPE_DRIVE<26>
GRAPE_DRIVE<27>
GRAPE_DRIVE<28>
GRAPE_DRIVE<29>
GRAPE_DRIVE<30>
GRAPE_DRIVE<31>
KONA_S_TO_KONA_M_INT_L
TP_KONA_M_UART_RX
UART_DEBUG_TO_TOUCH_TX
UART_TOUCH_TO_DEBUG_TX
GPIO_SOC_TO_BT_TO_TOUCH_TS_SYNC
GPIO_TOUCH_TO_BT_SYNC
SPI_KONA_M_TO_KONA_S_SCLK
SPI_KONA_M_TO_KONA_S_MOSI
SPI_KONA_M_TO_KONA_S_MISO
SPI_KONA_M_TO_KONA_S_CS_L
KONA_S_TO_KONA_M_RESET_DFT_L
KONA_M_GPIO_15
AP_DISP_TOUCH_BSYNC0_R
AP_DISP_TOUCH_BSYNC1_R
AP_DISP_TOUCH_EB_R
SPI_GRAPE_CS_L
GPIO_GRAPE_IRQ_L
SPI_GRAPE_SCLK
SPI_GRAPE_MOSI
SPI_GRAPE_MISO
KMSI_MISO
KMSI_MOSI
KMSI_STRB_IN
KMSI_STRB_OUT
PSE_SYNC
KONA_M_TEST_MODE
SWD_KONA_SWDIO
SWD_KONA_SWCLK_R
KONA_JTAG_TDI
KONA_JTAG_TDO
KONA_JTAG_TRST_L
GPIO_GRAPE_RST_L
KONA_BOOST_ATEST
PP15V0_TOUCH
KONA_BOOST_ISENSE
KONA_BOOST_NGATE
KONA_BOOST_VBAT
KONA_BOOST_EN
KONA_BOOST0_M
KONA_BOOST1_M
KONA_BGBIAS
R3005 0.00
R3060 0.00
R3061 0.00
R3062 0.00
R3070 0.00
R3011 10K
R3014 1.00M
C3016 20PF
XW3001 SHORT-8L-0.091MM-SM
C3017 10PF
XW3050 SHORT-8L-0.091MM-SM
C3090 0.1UF
C3091 20PF
U3090 24MHZ-25PPM-1.8V 2.0X1.6X0.7-SM
CLK_SOC_TO_TOUCH_24MHZ
CLK_TOUCH_24MHZ_C
CLK_KONA_M_24MHZ
CLK_KONA_S_24MHZ
CLK_TOUCH_OSC_24MHZ
PP1V8_TOUCH_EXT_SW
Q3001 SIA445EDJ SC70-6L
PPVCC_MAIN
KONA_BOOST_MAIN_GATED
KONA_BOOST_MAIN_R
KONA_BOOST_LX
R3007 10K
C3011 1UF
C3026 0.1UF
C3020 10UF
R3008 0.15
XW3004 SHORT-8L-0.091MM-SM
XW3003 SHORT-8L-0.091MM-SM
L3001 22UH-20%-0.61A-0.60HM VLF504010-SM
Q3002 CSD17381F4 0402
R3006 1.00K
KONA_BOOST_EN
KONA_BOOST_EN_R
D3001 SOD523 ZLLS350
C3012 10UF
C3013 10UF
C3014 10UF
C3015 10UF
C3068 180PF
PP15V0_TOUCH
FL3004 FERR-220-OHM
PP3V3_TOUCH_EXT_SW
PP3V3_TOUCH_FILT
C3038 330PF
C3039 12PF
C3024 0.22UF
C3025 0.22UF
C3031 0.47UF
FL3003 FERR-220-OHM
PP1V8_TOUCH_EXT_SW1
PP1V8_TOUCH_XTAL_FILT
C3027 0.22UF
C3028 0.1UF
PP2V8_KONA_M_VDDANA
C3078 330PF
C3079 12PF
C3001 0.1UF
C3002 0.1UF
C3003 0.1UF
C3004 0.1UF
C3005 0.1UF
C3006 2.2UF
R3010
PP1V5V0_TOUCH_FILT
C3021 0.47UF
C3022 0.47UF
C3023 0.47UF
C3032 0.47UF
C3080 0.47UF
C3081 0.47UF
C3082 0.47UF
KONA_M_VDDADC_CAP
C3029 1.0UF
PP1V8_TOUCH_EXT_SW
R3050 100
PP1V8_TOUCH_AON_RC
C3050 2.2UF
KONA_M_VDDCORE_CAP
C3018 1.0UF
C3019 0.1UF
BOOST_OPTION
R3001 10K
R3003 10K
R3002 10K
R3004 10K
BOOT_OPTION
BOOST_OPTION
BOOST_OPTION
BOOST

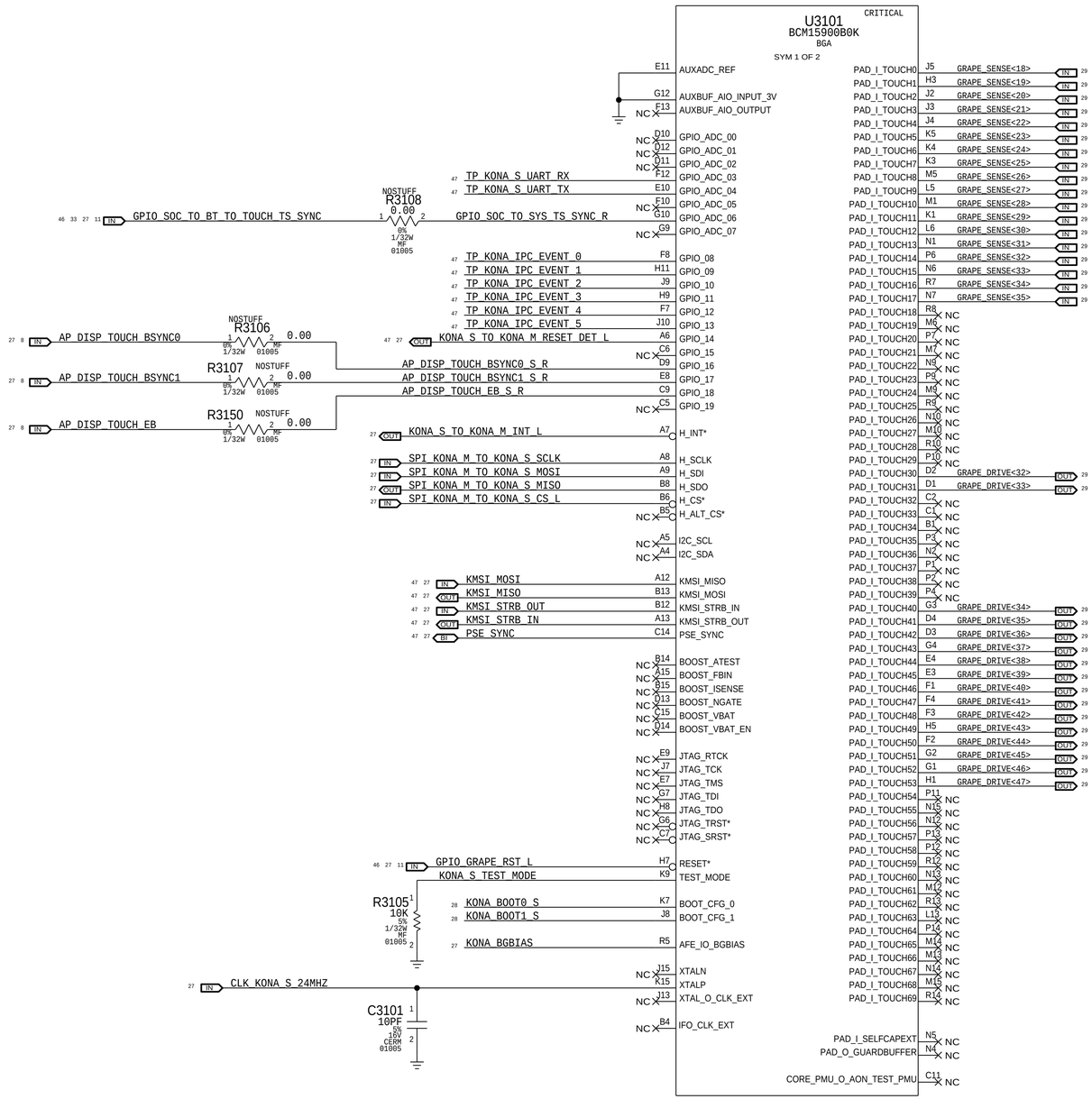

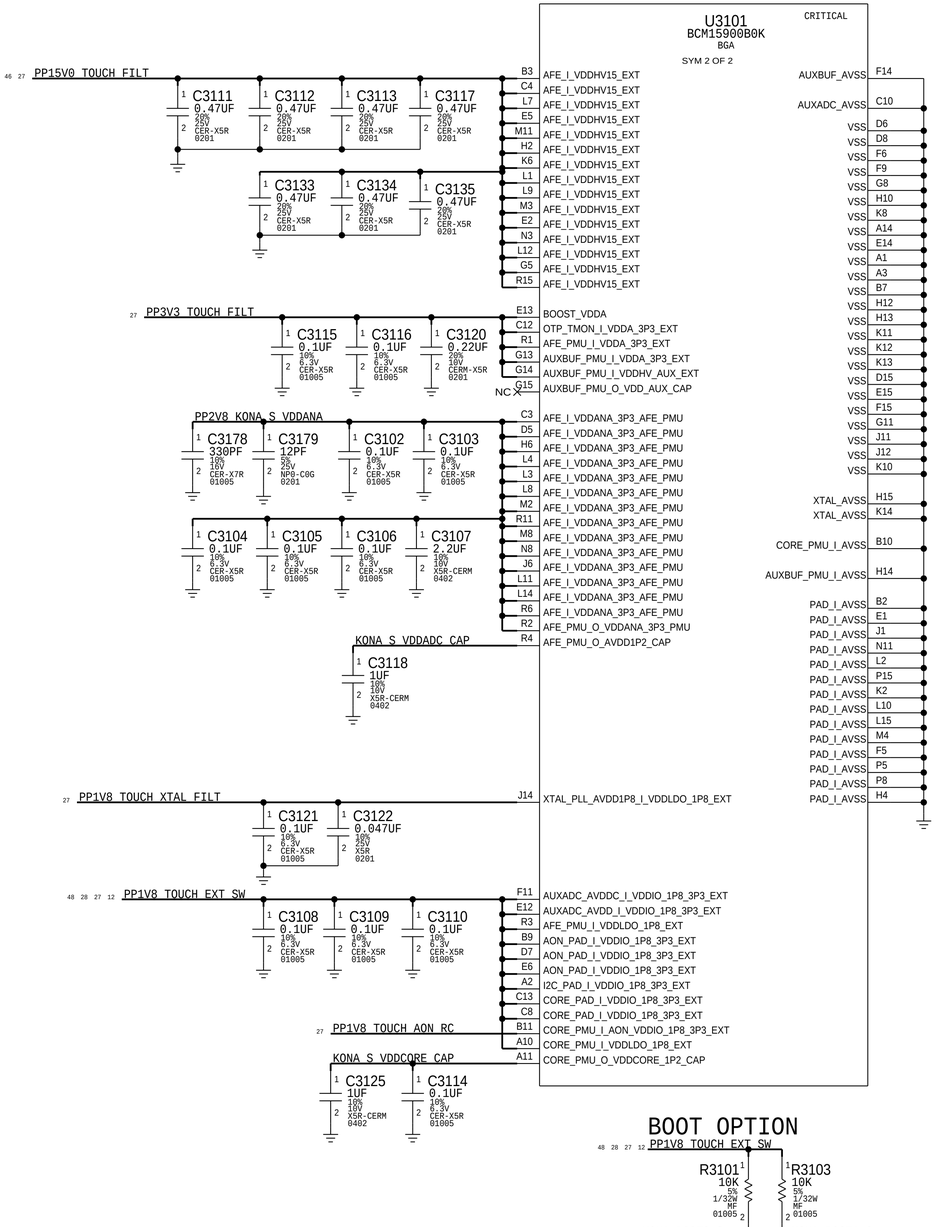

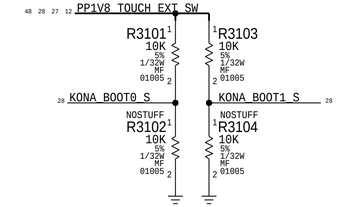

SYNC_MASTER=JAMES_MLBB1 SYNC_DATE=12/20/2017

PAGE TITLE

TOUCH: KONA #2

TOUCH FLEX CONNECTOR

MLB: 516S00099

FLEX: 516S00098

CRITICAL

J4020

505066-5022

F-ST-SM

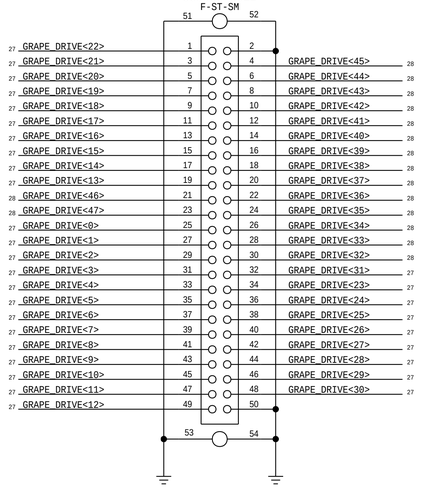

TOUCH FLEX CONNECTOR

MLB: 516S00146

FLEX: 516S00145

CRITICAL

J4040

245858036201829

F-ST-SM

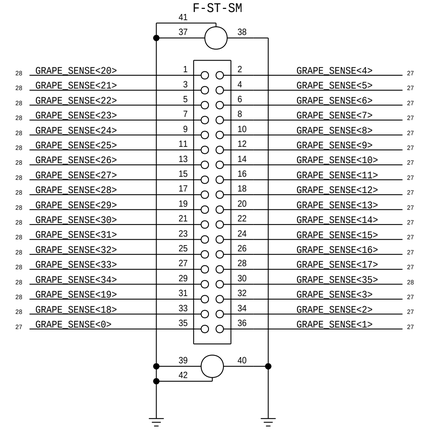

SYNC_MASTER=JAMES_MLBB1 SYNC_DATE=12/20/2017

PAGE TITLE

TOUCH: CONNS

IO FLEX HOTBAR PADS

MLB 998-5877
FLEX 998-5876

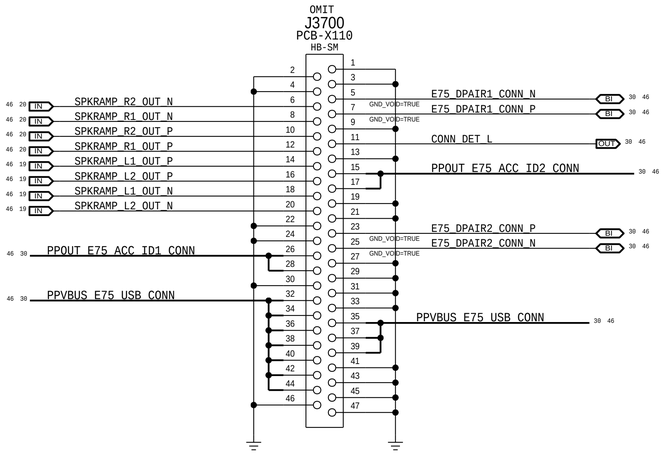

PINOUT MATCHES IO_FLEX 4.2.0 3/12/13

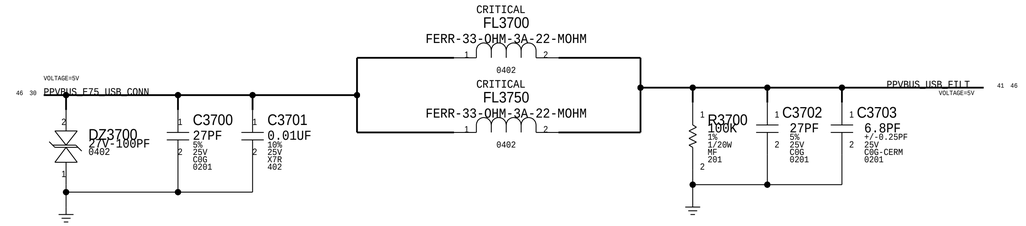

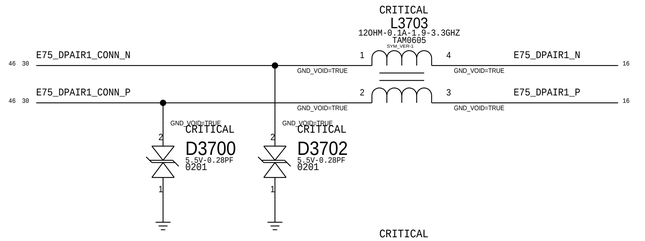

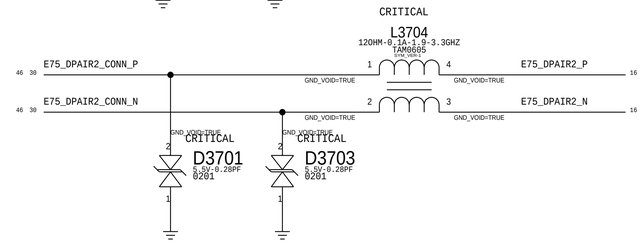

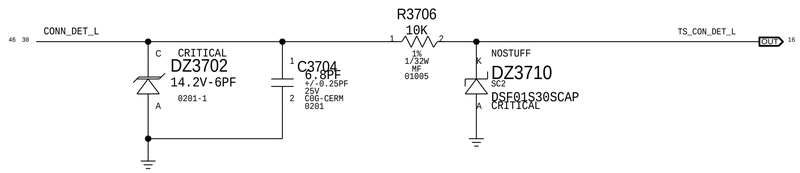

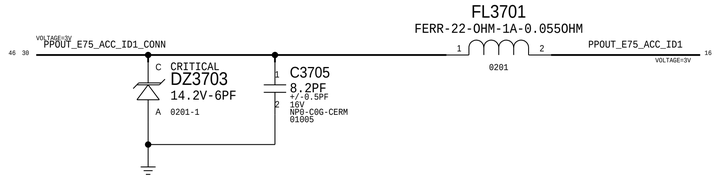

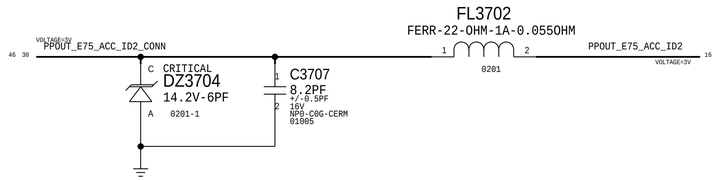

SYNC_MASTER=JAMES_MLBB1 SYNC_DATE=12/20/2017

PAGE TITLE

IO: FLEX HOTBAR & FILTERS

HALL-SENSOR-HOME-BUTTON-MESA FLEX CONN

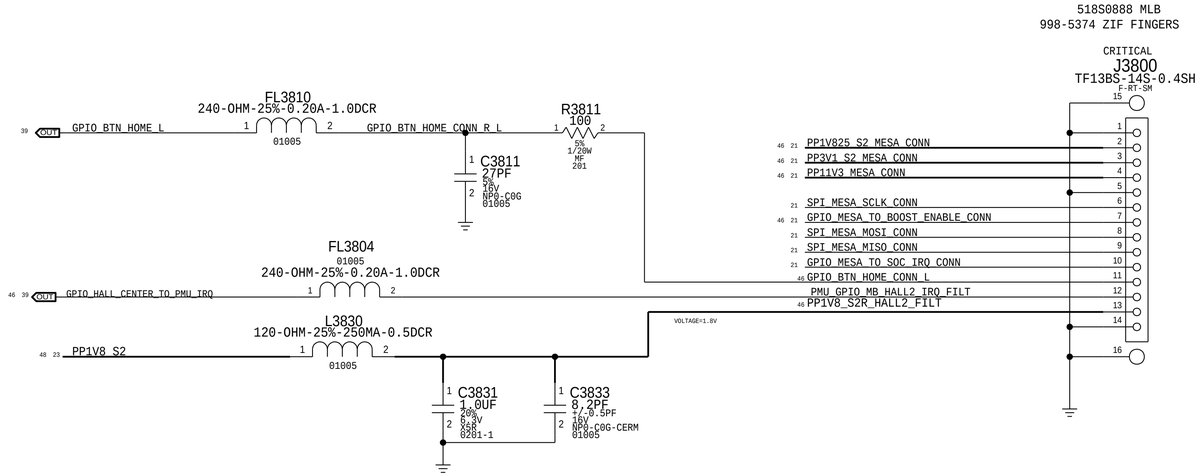

SYNC_MASTER=JAMES_MLBB1 SYNC_DATE=12/20/2017

PAGE TITLE

SENSOR-BTN: HALL, HOME & MESA

EDP CONNECTOR SUPPORT

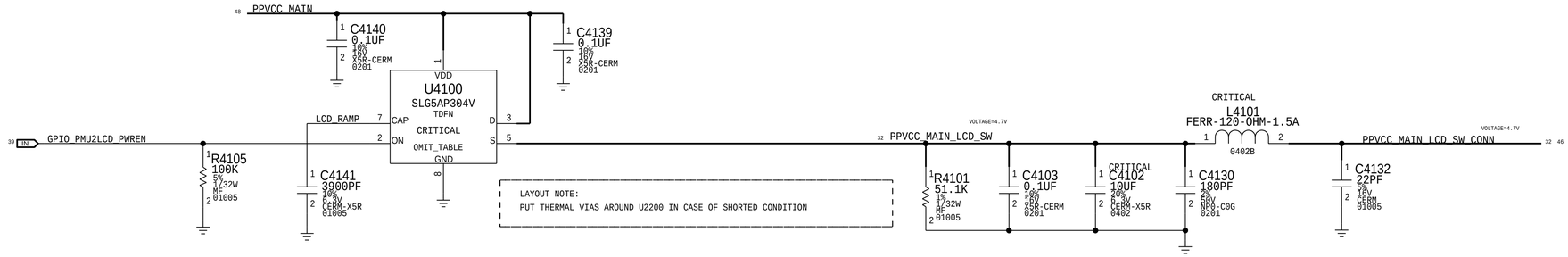

PART#	QTY	DESCRIPTION	REFERENCE DESIGNATOR(S)	CRITICAL	BOM OPTION
353S4272	1	IC,SLG5AP1423V	U4100	CRITICAL	

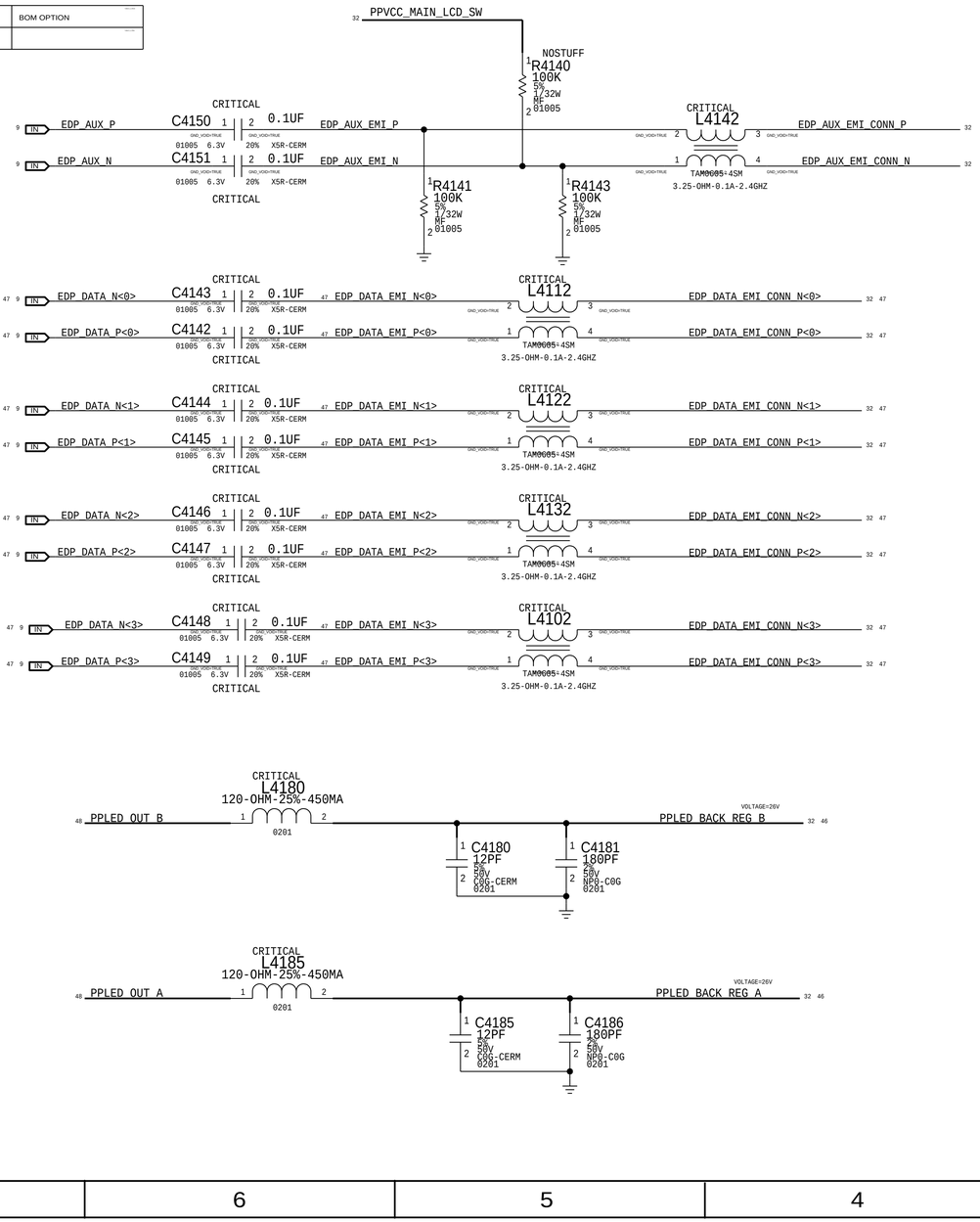

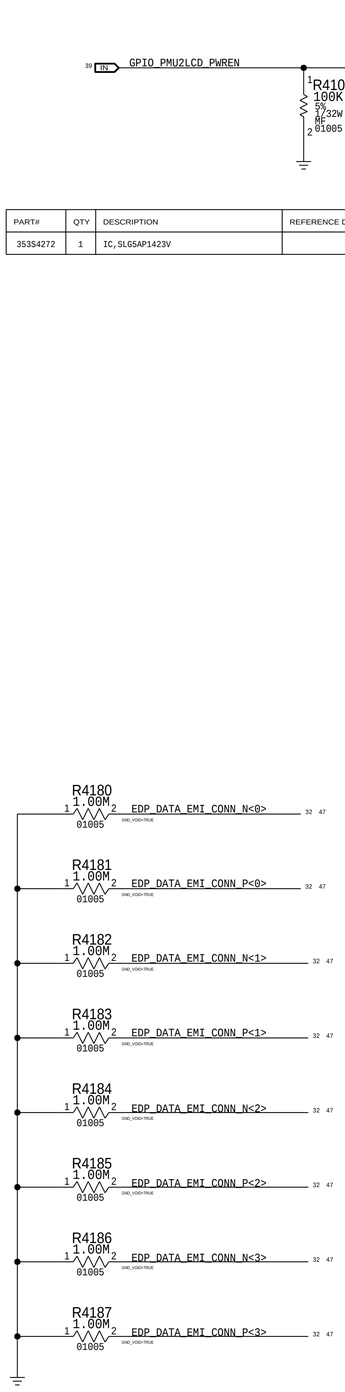

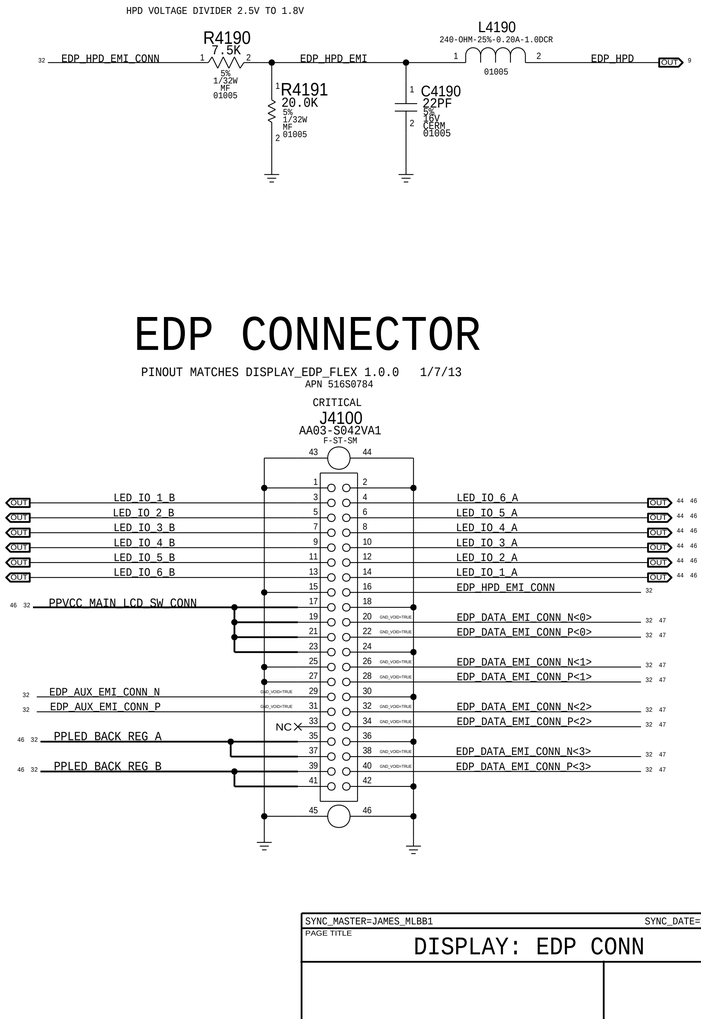

EDP CONNECTOR

PINOUT MATCHES DISPLAY_EDP_FLEX 1.0.0 1/7/13
APN 516S0784

SYNC_MASTER=JAMES_MLBB1 SYNC_DATE=12/20/2017

PAGE TITLE

DISPLAY: EDP CONN

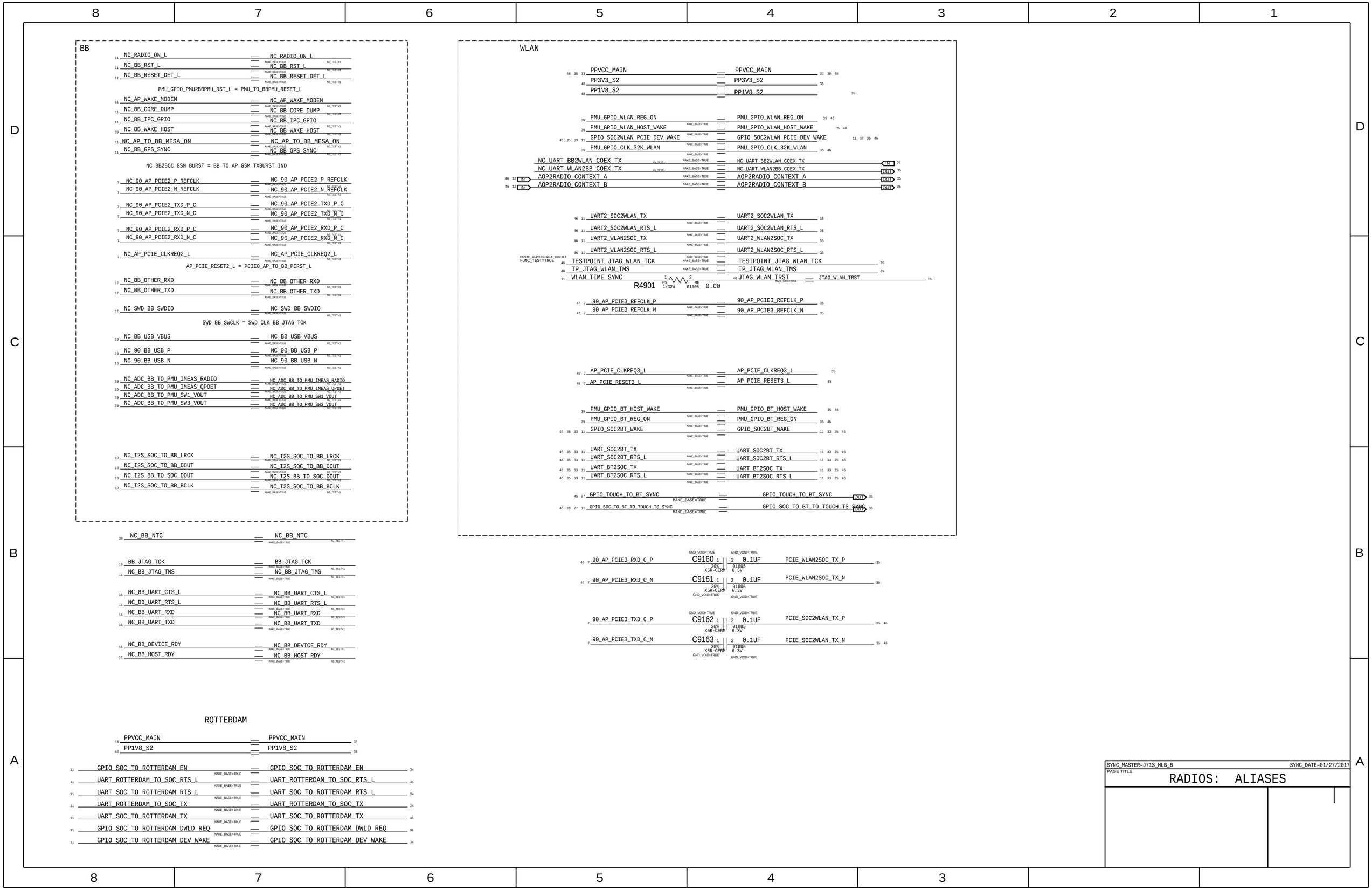
BB
NC_RADIO_ON_L
NC_BB_RST_L
NC_BB_RESET_DET_L
PMU_GPIO_PMU2BBPMU_RST_L = PMU_TO_BBPMU_RESET_L
NC_AP_WAKE_MODEM
NC_BB_CORE_DUMP
NC_BB_IPC_GPIO
NC_BB_WAKE_HOST
NC_AP_TO_BB_MESA_ON
NC_BB_GPS_SYNC
NC_BB2SOC_GSM_BURST = BB_TO_AP_GSM_TXBURST_IND
NC_90_AP_PCIE2_P_REFCLK
NC_90_AP_PCIE2_N_REFCLK
NC_90_AP_PCIE2_TXD_P_C
NC_90_AP_PCIE2_TXD_N_C
NC_90_AP_PCIE2_RXD_P_C
NC_90_AP_PCIE2_RXD_N_C
NC_AP_PCIE_CLKREQ2_L
AP_PCIE_RESET2_L = PCIE0_AP_TO_BB_PERST_L
NC_BB_OTHER_RXD
NC_BB_OTHER_TXD
NC_SWD_BB_SWDIO
SWD_BB_SWCLK = SWD_CLK_BB_JTAG_TCK
NC_BB_USB_VBUS
NC_90_BB_USB_P
NC_90_BB_USB_N
NC_ADC_BB_TO_PMU_IMEAS_RADIO
NC_ADC_BB_TO_PMU_IMEAS_QPOET
NC_ADC_BB_TO_PMU_SW1_VOUT
NC_ADC_BB_TO_PMU_SW3_VOUT
NC_I2S_SOC_TO_BB_LRCK
NC_I2S_SOC_TO_BB_DOUT
NC_I2S_BB_TO_SOC_DOUT
NC_I2S_SOC_TO_BB_BCLK
NC_BB_NTC
BB_JTAG_TCK
NC_BB_JTAG_TMS
NC_BB_UART_CTS_L
NC_BB_UART_RTS_L
NC_BB_UART_RXD
NC_BB_UART_TXD
NC_BB_DEVICE_RDY
NC_BB_HOST_RDY
ROTTERDAM
PPVCC_MAIN
PP1V8_S2
GPIO_SOC_TO_ROTTERDAM_EN
UART_ROTTERDAM_TO_SOC_RTS_L
UART_SOC_TO_ROTTERDAM_RTS_L
UART_ROTTERDAM_TO_SOC_TX
UART_SOC_TO_ROTTERDAM_TX
GPIO_SOC_TO_ROTTERDAM_DWLD_REQ
GPIO_SOC_TO_ROTTERDAM_DEV_WAKE
WLAN
PPVCC_MAIN
PP3V3_S2
PP1V8_S2
PMU_GPIO_WLAN_REG_ON
PMU_GPIO_WLAN_HOST_WAKE
GPIO_SOC2WLAN_PCIE_DEV_WAKE
PMU_GPIO_CLK_32K_WLAN
NC_UART_BB2WLAN_COEX_TX
NC_UART_WLAN2BB_COEX_TX
AOP2RADIO_CONTEXT_A
AOP2RADIO_CONTEXT_B
UART2_SOC2WLAN_TX
UART2_SOC2WLAN_RTS_L
UART2_WLAN2SOC_TX
UART2_WLAN2SOC_RTS_L
TESTPOINT_JTAG_WLAN_TCK
TP_JTAG_WLAN_TMS
WLAN_TIME_SYNC
JTAG_WLAN_TRST
R4901
90_AP_PCIE3_REFCLK_P
90_AP_PCIE3_REFCLK_N
AP_PCIE_CLKREQ3_L
AP_PCIE_RESET3_L
PMU_GPIO_BT_HOST_WAKE
PMU_GPIO_BT_REG_ON
GPIO_SOC2BT_WAKE
UART_SOC2BT_TX
UART_SOC2BT_RTS_L
UART_BT2SOC_TX
UART_BT2SOC_RTS_L
GPIO_TOUCH_TO_BT_SYNC
GPIO_SOC_TO_BT_TO_TOUCH_TS_SYNC
90_AP_PCIE3_RXD_C_P
90_AP_PCIE3_RXD_C_N
90_AP_PCIE3_TXD_C_P
90_AP_PCIE3_TXD_C_N
C9160
C9161
C9162
C9163
0.1UF
PCIE_WLAN2SOC_TX_P
PCIE_WLAN2SOC_TX_N
PCIE_SOC2WLAN_TX_P
PCIE_SOC2WLAN_TX_N
SYNC_MASTER=J71S_MLB_B
SYNC_DATE=01/27/2017
PAGE TITLE
RADIOS: ALIASES

STOCKHOLM

SECURE ELEMENT CONTROLLER

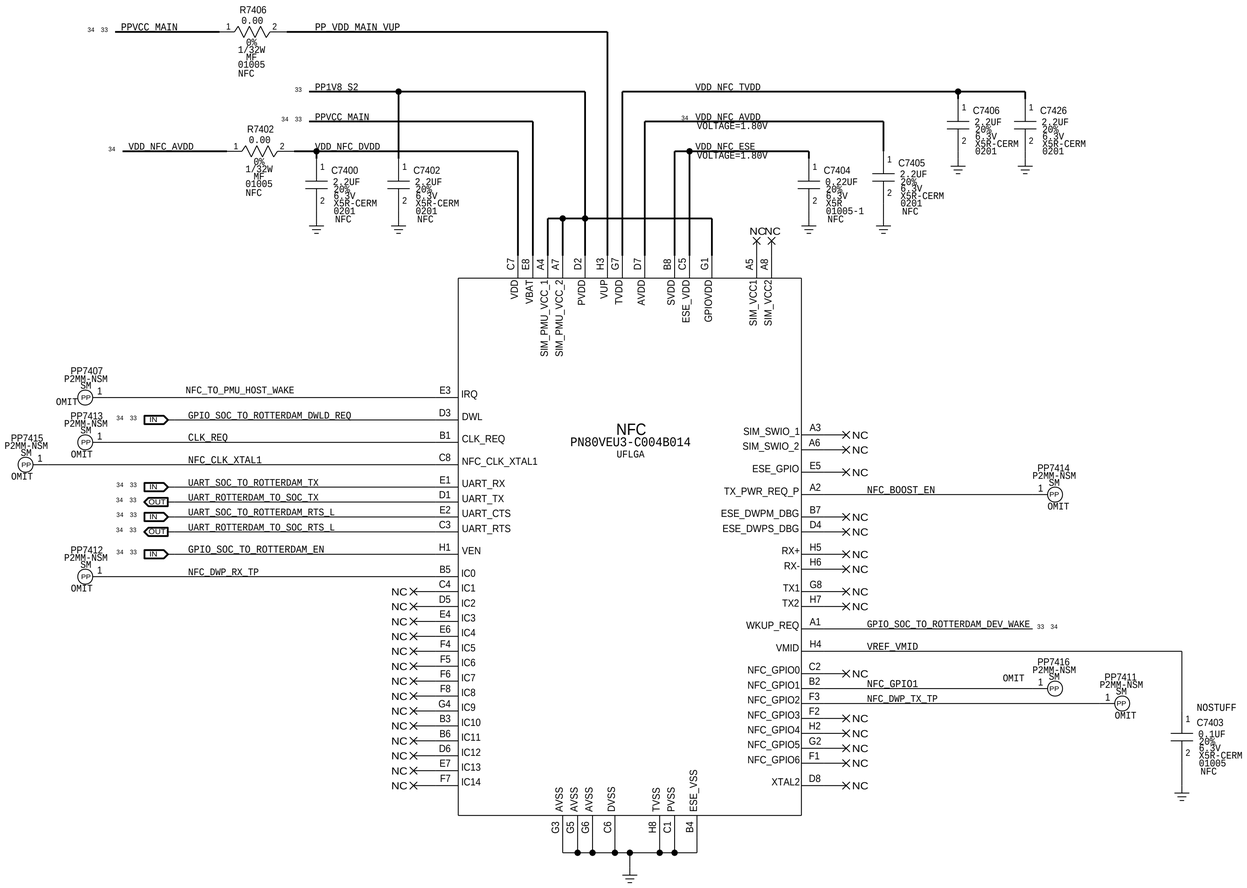

PULL DOWN

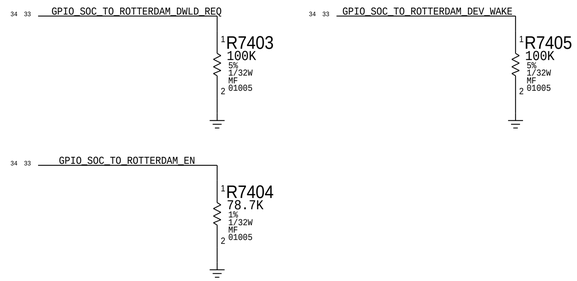

PROBE POINTS

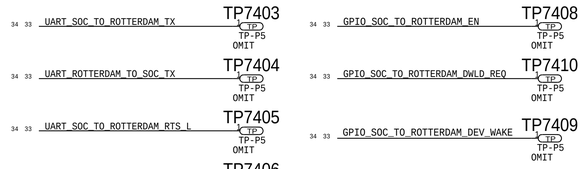

SYNC_MASTER=SECUREELEMENT SYNC_DATE=02/13/2018

PAGE TITLE

SECURE ELEMENT

WIFI/BT: J71B/72B: YEBISU MODULE, POWER, I/O

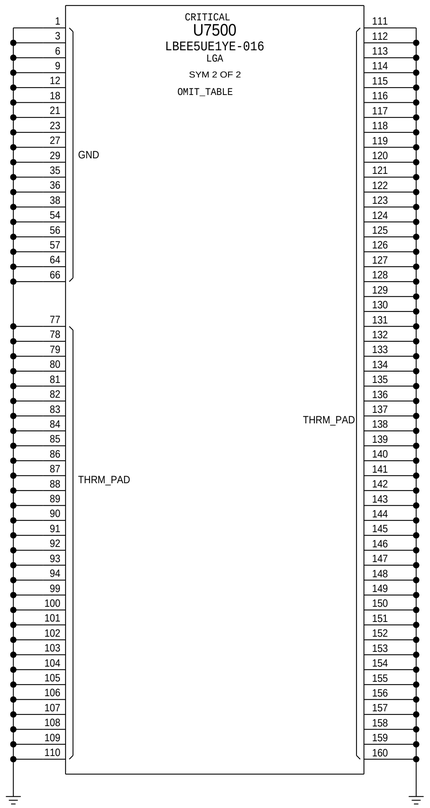

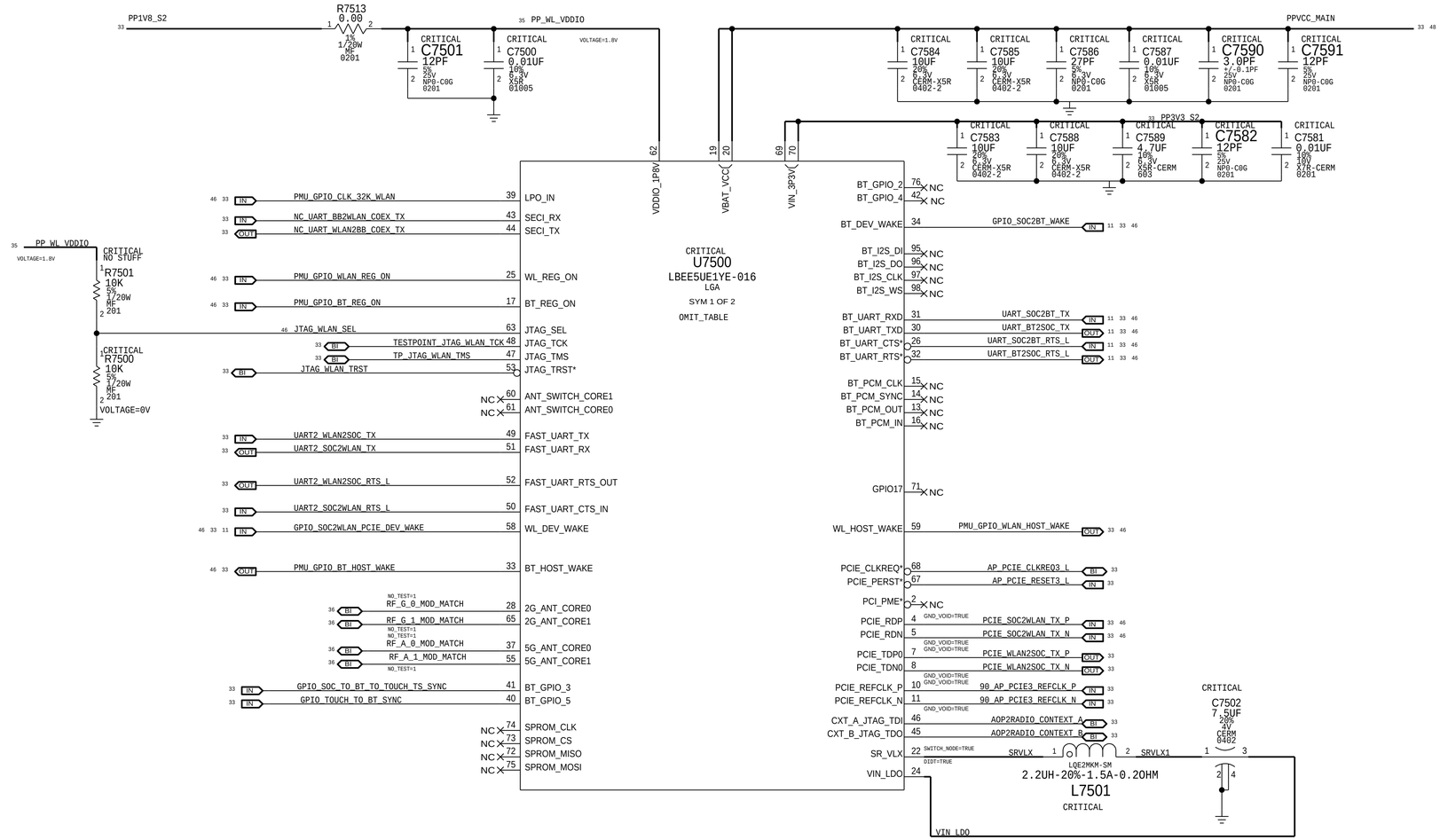

MODULE: USI ALTERNATES FOR MUR

PART NUMBER	ALTERNATE FOR PART NUMBER	BOM OPTION	REF DES	COMMENTS:
339S00447	339S00445		U7500	USI ALT FOR MUR
339S00448	339S00446		U7500	CIDRE USI ALT FOR MUR

MODULE: BOM OPTION FOR CIDRE IN MLB_A, NOT IN MLB_B

PART#	QTY	DESCRIPTION	REFERENCE DESIGNATOR(S)	CRITICAL	BOM OPTION
339S00445	1	YEBISU MURATA ES2	U7500	CRITICAL	MLB_B
339S00446	1	YEBISU CIDRE MURATA ES2	U7500	CRITICAL	MLB_A

LAST UPDATED: 06/15/2017

SYNC_MASTER=WIFI_MLB SYNC_DATE=11/16/2017

PAGE TITLE

WIFI/BT: MODULE

WIFI/BT: J71B (WIFI/BT ONLY) RF FRONT END

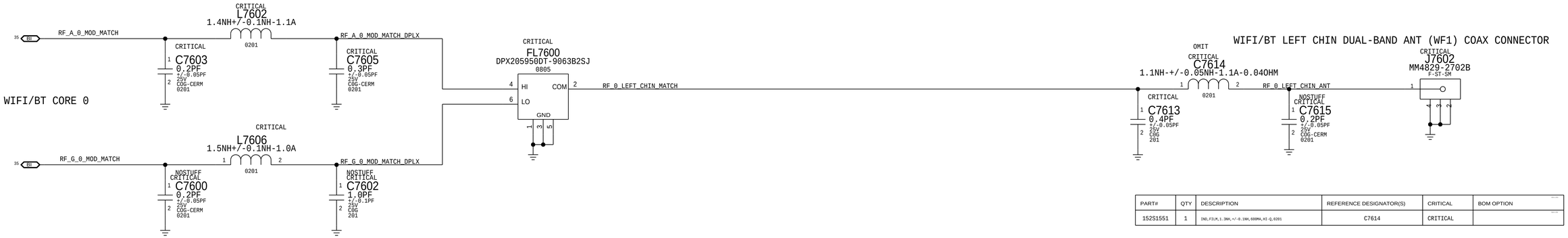

PART#	QTY	DESCRIPTION	REFERENCE DESIGNATOR(S)	CRITICAL	BOM OPTION
152S1551	1	IND,FILM,1.3NH,+/-0.1NH,600MA,HI-Q,0201	C7614	CRITICAL	

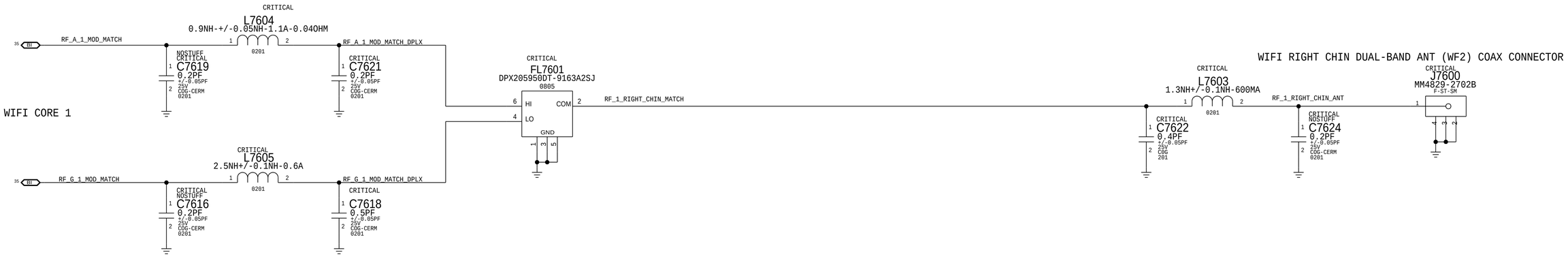

LAST UPDATED: 06/12/2017

SYNC_MASTER=WIFI_MLB	SYNC_DATE=11/16/2017
PAGE TITLE	
WIFI/BT: J71B FRONT END	

OMIT
CRITICAL

U8100
D2365A080F0AVBA2
WLCSP
SYM 2 OF 6

VCC_MAIN
BUCK

PPVCC_MAIN
48

C81A0 C81A1 C81A2 C81A3 C81A4 — 10UF 20% 6.3V CERM-X5R 0402 (CRITICAL)
E1 VDD_BUCK0_01
E2 VDD_BUCK0_01
E3 VDD_BUCK0_01
J1 VDD_BUCK0_23
J2 VDD_BUCK0_23
J3 VDD_BUCK0_23

PPVCC_MAIN
48

C81B0 C81B1 C81B2 C81B3 C81B4 — 10UF 20% 6.3V CERM-X5R 0402 (CRITICAL)
N1 VDD_BUCK1_01
N2 VDD_BUCK1_01
N3 VDD_BUCK1_01
U1 VDD_BUCK1_23
U2 VDD_BUCK1_23
U3 VDD_BUCK1_23

PPVCC_MAIN
48

C81B8 C81B9 — 10UF 20% 6.3V CERM-X5R 0402 (CRITICAL)
V9 VDD_BUCK2
W9 VDD_BUCK2
A15 VDD_BUCK3
B15 VDD_BUCK3

PPVCC_MAIN
48

C81C0 C81C1 C81C2 — 150UF 5% 6.3V TANT-POLY CASE-B3 (CRITICAL)
C81CE — 82PF 5% 6.3V NP0-C0G 01005
C81CF — 18PF 5% 16V C0G 01005
A7 VDD01_BUCK4
B7 VDD01_BUCK4

C81D0 C81D1 C81D2 C81D3 C81D4 C81D5 C81D6 C81D7 — 10UF 20% 6.3V CERM-X5R 0402 (CRITICAL)
A11 VDD_BUCK57
B11 VDD_BUCK57
V13 VDD_BUCK6
W13 VDD_BUCK6

C81D8 C81D9 C81DA C81DB C81DC C81DD C81DE C81DF — 10UF 20% 6.3V CERM-X5R 0402 (CRITICAL)
U15 VDD_BYP_BUCK6
V15 VDD_BYP_BUCK6
W15 VDD_BYP_BUCK6

C81E0 C81E1 C81E2 C81E3 C81E4 C81E5 — 10UF 20% 6.3V CERM-X5R 0402 (CRITICAL)
C81EA — 1.0UF 20% 6.3V X5R 0201-1
V5 VDD_BUCK8
W5 VDD_BUCK8
U17 VDD_MAIN_S (FOR THE PMU TO SENSE THE PLANE)
G13 VDD_MAIN
G5 VDD_MAIN
R6 VDD_MAIN
V16 VDD_MAIN
V17 VDD_MAIN
V18 VDD_MAIN
V19 VDD_MAIN

CRITICAL
L8170 — PILC201610-SM
XW8170 (SM)
1.0UH-3.33A-66MOHM
SWITCH_NODE=TRUE
DIDT=TRUE
BUCK7_LX0
BUCK7_FB
A10 BUCK7_LX0
B10 BUCK7_LX0
E9 BUCK7_FB

PPVDD_CPU_SRAM
48 47 46

C8170 C8171 C8172 C8173 — 15UF 20% 4V CERM 0402 (CRITICAL)
C817F — 100PF 5% 16V NP0-C0G 01005

43 BUCK8_LX0 — V6 BUCK8_LX0
43 BUCK8_LX0 — W6 BUCK8_LX0
43 BUCK8_FB — R7 BUCK8_FB

BUCK0_LX0 D1
BUCK0_LX0 D2
BUCK0_LX0 D3
BUCK0_LX1 F1
BUCK0_LX1 F2
BUCK0_LX1 F3
BUCK0_LX2 H1
BUCK0_LX2 H2
BUCK0_LX2 H3
BUCK0_LX3 K1
BUCK0_LX3 K2
BUCK0_LX3 K3
BUCK0_FB F5

BUCK0_LX0 — 0.82UH-20%-4.7A-0.038OHM — PIEA25201D — L8100 (CRITICAL)
BUCK0_LX1 — 0.82UH-20%-4.7A-0.038OHM — PIEA25201D — L8101 (CRITICAL)
BUCK0_LX2 — 0.82UH-20%-4.7A-0.038OHM — PIEA25201D — L8102 (CRITICAL)
BUCK0_LX3 — 0.82UH-20%-4.7A-0.038OHM — PIEA25201D — L8103 (CRITICAL)
SWITCH_NODE=TRUE DIDT=TRUE
BUCK0_FB — XW8100 (SM)

PPVDD_CPU
46 48

C8100 C8101 C8102 C8103 C8104 C8105 C8106 C8107 C8108 C8109 C810A C810B C810C C810D — 15UF 20% 4V CERM 0402 (CRITICAL)
C810E C810G C810H C810J C810K — 15UF 20% 4V CERM 0402 (CRITICAL)
C810F — 100PF 5% 16V NP0-C0G 01005

BUCK1_LX0 M1
BUCK1_LX0 M2
BUCK1_LX0 M3
BUCK1_LX1 P1
BUCK1_LX1 P2
BUCK1_LX1 P3
BUCK1_LX2 T1
BUCK1_LX2 T2
BUCK1_LX2 T3
BUCK1_LX3 V1
BUCK1_LX3 V2
BUCK1_LX3 V3
BUCK1_FB P5

BUCK1_LX0 — 0.82UH-20%-4.7A-0.038OHM — PIEA25201D — L8110 (CRITICAL)
BUCK1_LX1 — 0.82UH-20%-4.7A-0.038OHM — PIEA25201D — L8111 (CRITICAL)
BUCK1_LX2 — 0.82UH-20%-4.7A-0.038OHM — PIEA25201D — L8112 (CRITICAL)
BUCK1_LX3 — 0.82UH-20%-4.7A-0.038OHM — PIEA25201D — L8113 (CRITICAL)
SWITCH_NODE=TRUE DIDT=TRUE
BUCK1_FB — XW8110 (SM)

PPVDD_GPU
39 46 48

C8110 C8111 C8112 C8113 C8114 C8115 C8116 C8117 C8118 C8119 C811A C811B C811C C811D — 15UF 20% 4V CERM 0402 (CRITICAL)
C811E C811G C811H C811J C811K — 15UF 20% 4V CERM 0402 (CRITICAL)
C811F — 100PF 5% 16V NP0-C0G 01005

BUCK2_LX0 V8
BUCK2_LX0 W8
BUCK2_LX1 V10
BUCK2_LX1 W10
BUCK2_FB R10

BUCK2_LX0 — 1UH-20%-3.51A-0.044OHM — PIEA021D-SM — L8120 (CRITICAL)
BUCK2_LX1 — 1UH-20%-3.51A-0.044OHM — PIEA021D-SM — L8121 (CRITICAL)
SWITCH_NODE=TRUE DIDT=TRUE
BUCK2_FB — XW8120 (SM)

PPVDD_S1_SOC
46 48

C8120 C8121 C8122 C8123 C8124 C8125 C8126 C8180 — 15UF 20% 4V CERM 0402 (CRITICAL)
C812F — 100PF 5% 16V NP0-C0G 01005

BUCK3_LX0 A14
BUCK3_LX0 B14
BUCK3_FB D14

BUCK3_LX0 — 1UH-20%-3.51A-0.044OHM — PIEA021D-SM — L8130 (CRITICAL)
SWITCH_NODE=TRUE DIDT=TRUE
BUCK3_FB — XW8130 (SM)

PP1V8_S2
46 48

C8130 C8131 C8132 C8133 C8134 C8135 — 15UF 20% 4V CERM 0402 (CRITICAL)
C813F — 100PF 5% 16V NP0-C0G 01005

BUCK4_LX0 A8
BUCK4_LX0 B8
BUCK4_LX1 A6
BUCK4_LX1 B6
BUCK4_FB E7

43 BUCK4_LX0
43 BUCK4_LX0
43 BUCK4_LX1
43 BUCK4_LX1
43 BUCK4_FB

BUCK5_LX0 A12
BUCK5_LX0 B12
BUCK5_FB E10

43 BUCK5_LX0
43 BUCK5_LX0
43 BUCK5_FB

VBUCK6_BYP U14
VBUCK6_BYP V14
VBUCK6_BYP W14
BUCK6_LX0 V12
BUCK6_LX0 W12
BUCK6_FB R12

L8160 — CRITICAL — 1UH-20%-3.51A-0.044OHM — PIEA021D-SM
BUCK6_LX0
SWITCH_NODE=TRUE DIDT=TRUE
XW8160 (SM)

PP3V3_S2
46 48

C8160 C8161 C8162 C8163 C8164 C8165 C8166 C8181 C8182 C8183 — 15UF 20% 6.3V X5R 0402-1 (CRITICAL)
C816A — 100PF 5% 16V NP0-C0G 01005

SYNC_MASTER=JAMES_MLBB1 SYNC_DATE=12/20/2017
PAGE TITLE
POWER: ANGEL (1/5)

PART NUMBER	ALTERNATE FOR PART NUMBER	BOM OPTION	REF DES	COMMENTS:
138S0703	138S9648		C8233	AND 7 MORE REFDES

CRITICAL

U8100
D2365A080FOAVBA2
WLCSP
SYM 6 OF 6

C1	VSS(VSS_BUCK0_0)
C2	VSS(VSS_BUCK0_0)
C3	VSS(VSS_BUCK0_0)
G1	VSS(VSS_BUCK0_12)
G2	VSS(VSS_BUCK0_12)
G3	VSS(VSS_BUCK0_12)
L1	VSS(VSS_BUCK01)
L2	VSS(VSS_BUCK01)
L3	VSS(VSS_BUCK01)
R1	VSS(VSS_BUCK1_12)
R2	VSS(VSS_BUCK1_12)
R3	VSS(VSS_BUCK1_12)
W1	VSS(VSS_BUCK1_3)
W2	VSS(VSS_BUCK1_3)
W3	VSS(VSS_BUCK1_3)
V11	VSS(VSS0_BUCK26)
W11	VSS(VSS0_BUCK26)
V7	VSS(VSS_BUCK28)
W7	VSS(VSS_BUCK28)
A13	VSS(VSS0_BUCK35)
B13	VSS(VSS0_BUCK35)
A9	VSS(VSS0_BUCK47)
B9	VSS(VSS0_BUCK47)
A5	VSS(VSS1_BUCK4)
B5	VSS(VSS1_BUCK4)
B16	VSS_LCM_SW
C10	VSS_NC
C11	VSS_NC
C12	VSS_NC
C13	VSS_NC
C5	VSS_NC
C6	VSS_NC
C7	VSS_NC
C8	VSS_NC
C9	VSS_NC
D10	VSS_NC
D11	VSS_NC
D12	VSS_NC
C14	VSS_NC
D4	VSS_NC
F4	VSS_NC
G4	VSS_NC
H4	VSS_NC
J4	VSS_NC
K4	VSS_NC
VSS	M19
VSS	L5
VSS	E11
VSS	E12
VSS	E6
VSS	F10
VSS	F11
VSS	F12
VSS	G16
VSS	G18
VSS	H13
VSS	H14
VSS	H18
VSS	P19
VSS	J11
VSS	J12
VSS	J14
VSS	J19
VSS	K11
VSS	K12
VSS	K13
VSS	K14
VSS	K15
VSS	L11
VSS	L14
VSS	L15
VSS	M11
VSS	M14
VSS	M15
VSS	N10
VSS	N11
VSS	N14
VSS	P10
VSS	P11
VSS	R8
VSS	U19
VSS	V4
VSS	W4
VSS	L4
VSS	C17
VSS_NC	M4
VSS_NC	N16
VSS_NC	N4
VSS_NC	P4
VSS_NC	R4
VSS_NC	T4
VSS_NC	U10
VSS_NC	U11
VSS_NC	U12
VSS_NC	U13
VSS_NC	U4
VSS_NC	U5
VSS_NC	U6
VSS_NC	U7
VSS_NC	U8
VSS_NC	U9

VOLTAGE=0V

LDO INPUTS

CRITICAL

U8100
D2365A080FOAVBA2
WLCSP
SYM 3 OF 6

PPVCC_MAIN
PP1V8_S2
C8290 1UF 10% 6.3V CERM 402
C8291 1UF 10% 6.3V CERM 402

PP1V1_S2
C8292 1UF 10% 6.3V CERM 402

PP1V8_S2
C8293 1.0UF 20% 6.3V X5R 0201-1
C8295 1.0UF 20% 6.3V X5R 0201-1

PP1V1_S2
C8294 1.0UF 20% 6.3V X5R 0201-1

PMU_VPUMP
C8299 0.1UF 10% 6.3V X5R 0201

E14	VDD_LDO1
E13	VDD_LDO2
D18	VDD_LDO34
F18	VDD_LDO5
J18	VDD_LDO6
J15	VDD_LDO7
G14	VDD_LDO8
F16	VDD_LDO9
B18	VDD_LDO10
B19	VDD_LDO10
F17	VDD_LDO11
J16	VDD_LDO13
D19	VDD_LDO14
F19	VDD_LDO15
F14	VDD_LDO16
A2	VBUCK3
A3	VBUCK3
B4	VBUCK4
B1	VPUMP
B2	VPUMP

LDO INPUT

LDO OUTPUT

SWITCHED INPUT

SWITCHED OUTPUT

LDO OUTPUTS

VLDO1	E15	(50MA; 2.5-3.3V)	PP3V0_S2_TRISTAR	46 48
VLDO2	F13	(100MA; 1.65-1.8V)	PP1V8_S2_VA_VCP	46 48
			ACTIVE - BYPASS MODE (1.8V)	
			HIBERNATE - LDO MODE (1.7V)	
VLDO3	C18	(50MA; 2.5-3.3V)	PP3V3_USB	48
VLDO4	D17	(50MA; 2.5-3.3V)	PP3V0_ALS	46 48
VLDO5	E18	(1000MA; 2.5-3.6V)	NC	
VLDO6	J17	(150MA; 2.5-3.6V)	PP3V3_ACC	46 48
VLDO7	H15	(300MA; 2.5-3.3V)	PP3V0_S2_MISC	46 48
VLDO8	G15	(300MA; 2.5-3.3V)	PP3V1_S2_MESA	48
VLDO9	E16	(300MA; 1.7-3.0V)	PP1V25_REAR_CAM	48
VLDO10	A17	(1350MA; 0.7-1.2V)	PP0V9_NAND	46 48
VLDO10	A18			
VLDO10	A19			
VLDO11	E17	(300MA; 1.7-3.0V)	PP2V6_CAM_AF	48
VLDO13	H16	(300MA; 1.7-3.0V)	PP2V9_CAM	46 48
VLDO14	C19	(300MA; 0.8-1.5V)	PP1V2_SOC	46 48
VLDO15	E19	(1000MA; 0.7-1.2V)	PP0V8_S2_SOC_AOP	46 48
VLDO16	F15	(50MA; 1.7-3.0V)	PP1V825_S2_MESA	48
ON_BUF	R15	(10MA; 1.8V)	PP1V8_ALWAYS	46 48
BUCK3_SW1	A1		PP1V8_SW1	46 48
BUCK3_SW1	E4			
BUCK3_SW2	A4		NC	
BUCK3_SW3	B3		PP1V8_S2_SW3	46 48
BUCK4_SW2	C4		NC	

CRITICAL C8204 20UF 20% 6.3V CERM-X5R 0402-9
CRITICAL C8200 2.2UF 10% 6.3V X5R 402

CRITICAL C8212 2.2UF 10% 6.3V X5R 402
CRITICAL C8213 2.2UF 10% 6.3V X5R 402

CRITICAL C8220 10UF 20% 6.3V CERM-X5R 0402

CRITICAL C8228 10UF 20% 6.3V CERM-X5R 0402-9
CRITICAL C8224 10UF 20% 6.3V CERM-X5R 0402-9 NOSTUFF

CRITICAL C8236 10UF 20% 6.3V CERM-X5R 0402-9
CRITICAL C8233 4.7UF 20% 6.3V X5R 402
C8232 100PF 5% 16V NP0-C0G 01005

CRITICAL C8244 10UF 20% 6.3V CERM-X5R 0402-9
CRITICAL C8240 10UF 20% 6.3V CERM-X5R 0402-9

CRITICAL C8252 1.0UF 20% 6.3V X5R 0201-1
CRITICAL C8248 2.2UF 10% 6.3V X5R 402

CRITICAL C8260 0.22UF 20% 6.3V X5R 0201
CRITICAL C8256 4.7UF 20% 6.3V X5R 402

C8278 1.0UF 20% 6.3V X5R 0201-1
C8270 1UF 10% 6.3V CERM 402

SYNC_MASTER=JAMES_MLBB1 SYNC_DATE=12/20/2017

PAGE TITLE

POWER: ANGEL (2/5)

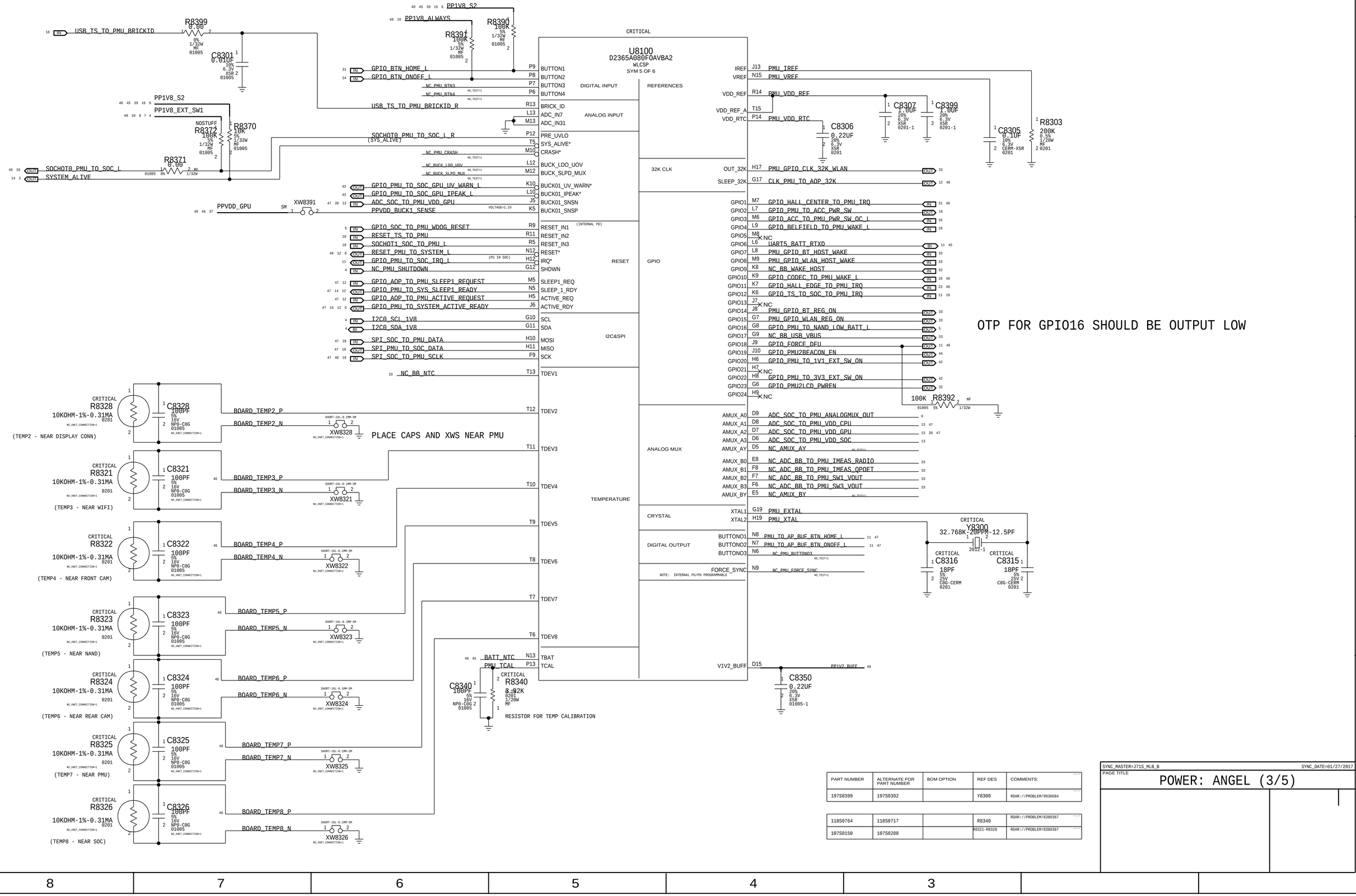

PART NUMBER	ALTERNATE FOR PART NUMBER	BOM OPTION	REF DES	COMMENTS:
197S0399	197S0392		Y8300	RDAR://PROBLEM/9936684

118S0764	118S0717		R8340	RDAR://PROBLEM/8380367
107S0150	107S0208		R8321-R8328	RDAR://PROBLEM/8380367

SYNC_MASTER=J71S_MLB_B SYNC_DATE=01/27/2017

PAGE TITLE

POWER: ANGEL (3/5)

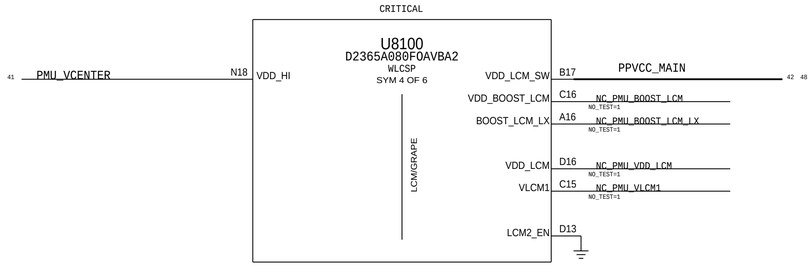

SYNC_MASTER=JAMES_MLBB1 SYNC_DATE=12/20/2017

PAGE TITLE

POWER: ANGEL (4/5)

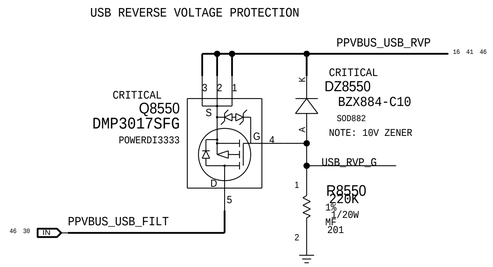

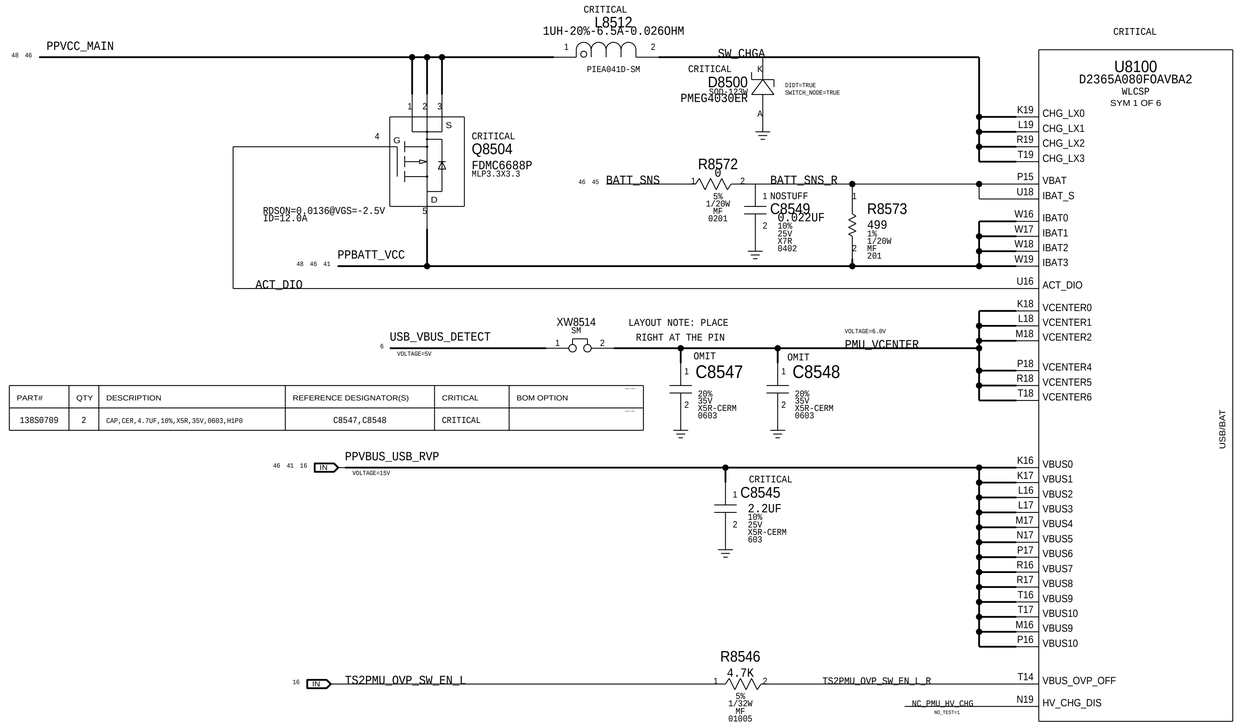

PART#	QTY	DESCRIPTION	REFERENCE DESIGNATOR(S)	CRITICAL	BOM OPTION
138S0709	2	CAP,CER,4.7UF,10%,X5R,35V,0603,M1P0	C8547,C8548	CRITICAL	

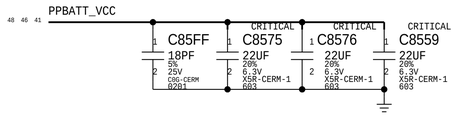

NOTE: FOR NO BATTERY SITUATION

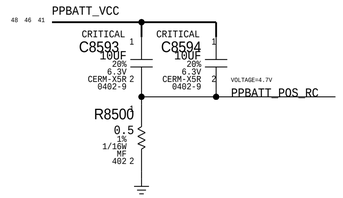

SYNC_MASTER=JAMES_MLBB1 SYNC_DATE=12/20/2017

PAGE TITLE

POWER: ANGEL (5/5)

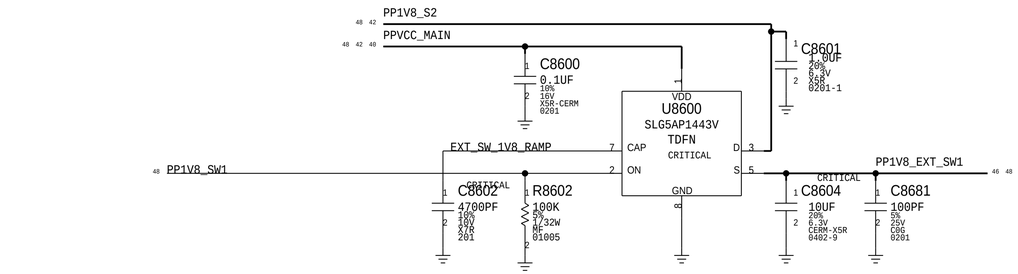

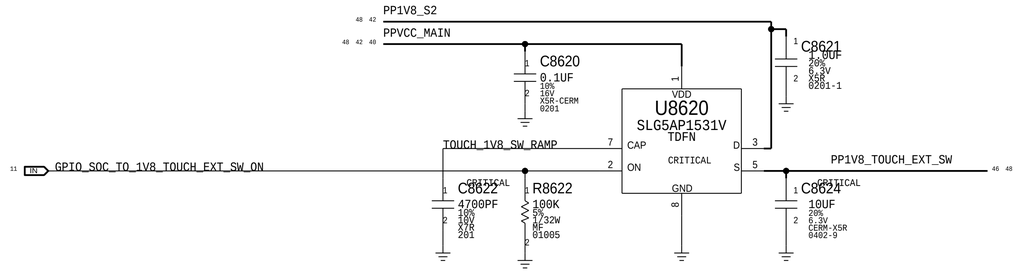

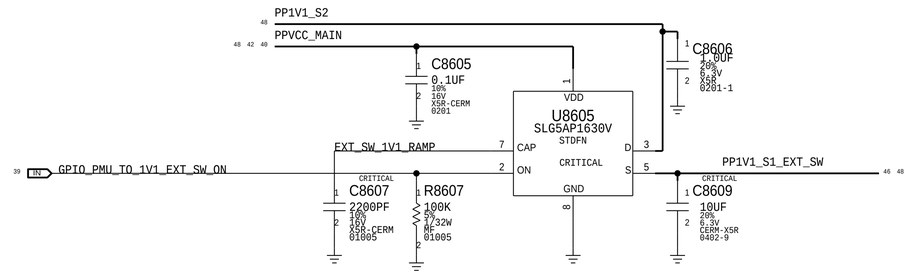

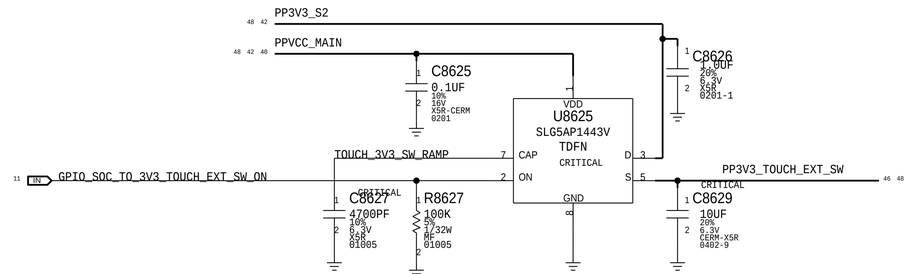

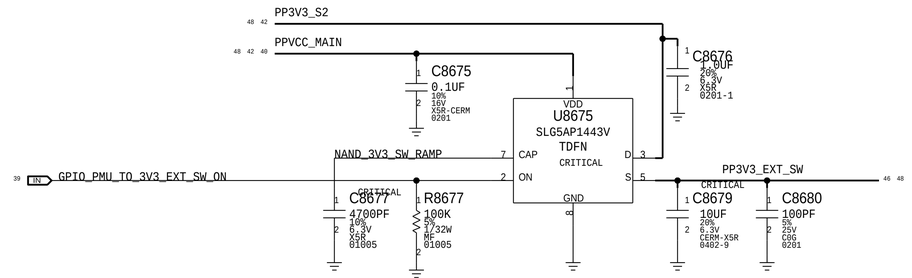

SYNC_MASTER=JAMES_MLBB1 SYNC_DATE=12/20/2017

PAGE TITLE

POWER: EXTERNAL SWITCHES & LDOS

NOSTUFF
R8700
0.00
0%
1/32W
MF
01005

39 GPIO_PMU_TO_SOC_GPU_UV_WARN_L → THROTTLE_GPU_SOC_TO_PMU_L

10 43

NOSTUFF
R8701
0.00
0%
1/32W
MF
01005

39 GPIO_PMU_TO_SOC_GPU_IPEAK_L → THROTTLE_GPU_SOC_TO_PMU_L

10 43

NOTE: JOSE TO DECIDE

L8740
1UH-20%-3.51A-0.044OHM
CRITICAL
PIEA021D-SM

BUCK4

37 BUCK4_LX0 (MAKE_BASE=TRUE) → BUCK4_LX0 (SWITCH_NODE=TRUE, DIDT=TRUE)

37 BUCK4_LX0

L8742
1UH-20%-3.51A-0.044OHM
CRITICAL
PIEA021D-SM

37 BUCK4_LX1 (MAKE_BASE=TRUE) → BUCK4_LX1 (DIDT=TRUE, SWITCH_NODE=TRUE)

37 BUCK4_LX1

37 BUCK4_FB (MAKE_BASE=TRUE) → BUCK4_FB

XW8740
SM

C8740 15UF 20% 4V CERM 0402 (CRITICAL)
C8741 15UF 20% 4V CERM 0402 (CRITICAL)
C8742 15UF 20% 4V CERM 0402 (CRITICAL)
C8743 15UF 20% 4V CERM 0402 (CRITICAL)
C8744 15UF 20% 4V CERM 0402 (CRITICAL)
C8745 15UF 20% 4V CERM 0402 (CRITICAL)
C8746 15UF 20% 4V CERM 0402 (CRITICAL)
C8760 0.1UF 20% 6.3V X5R-CERM 01005
C874F 100PF 5% 16V NP0-C0G 01005

PP1V1_S2 46 48

L8750
1.0UH-3.33A-66MOHM
CRITICAL
PILE20161D-SM

BUCK5

37 BUCK5_LX0 (MAKE_BASE=TRUE) → BUCK5_LX0 (DIDT=TRUE, SWITCH_NODE=TRUE)

37 BUCK5_LX0

37 BUCK5_FB (MAKE_BASE=TRUE) → BUCK5_FB

XW8750
SM

C8750 15UF 20% 4V CERM 0402 (CRITICAL)
C8751 15UF 20% 4V CERM 0402 (CRITICAL)
C8752 15UF 20% 4V CERM 0402 (CRITICAL)
C8753 15UF 20% 4V CERM 0402 (CRITICAL)
C875F 100PF 5% 16V NP0-C0G 01005

PPVDD_S1_FIXED 46 48

L8180
1.0UH-3.33A-66MOHM
CRITICAL
PILE20161D-SM

BUCK8

37 BUCK8_LX0 (MAKE_BASE=TRUE) → BUCK8_LX0 (SWITCH_NODE=TRUE, DIDT=TRUE)

37 BUCK8_LX0

37 BUCK8_FB (MAKE_BASE=TRUE) → BUCK8_FB

XW8780
SM

C8780 15UF 20% 4V CERM 0402 (CRITICAL)
C8781 15UF 20% 4V CERM 0402 (CRITICAL)
C8782 15UF 20% 4V CERM 0402 (CRITICAL)
C8783 15UF 20% 4V CERM 0402 (CRITICAL)
C878F 100PF 5% 16V NP0-C0G 01005

PPVDD_GPU_SRAM 46 48

SYNC_MASTER=JAMES_MLBB1 SYNC_DATE=12/20/2017

PAGE TITLE

POWER: BUCKS 4,5,8

BEACON 2

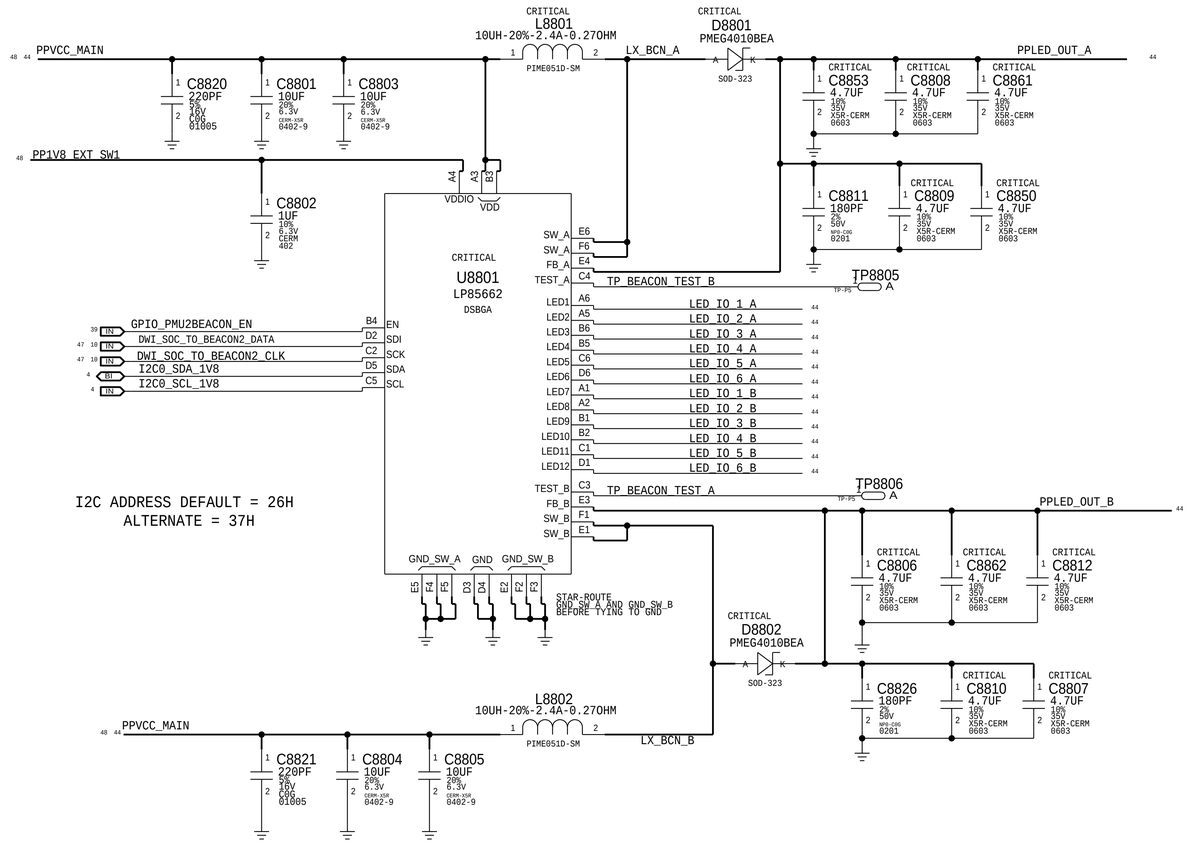

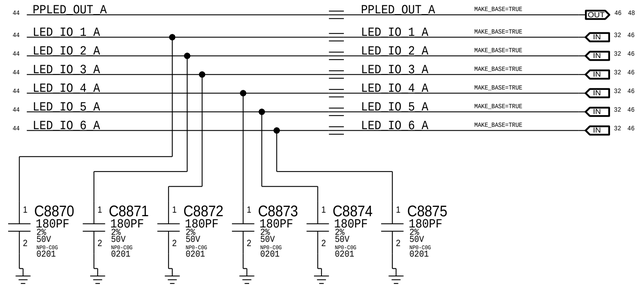

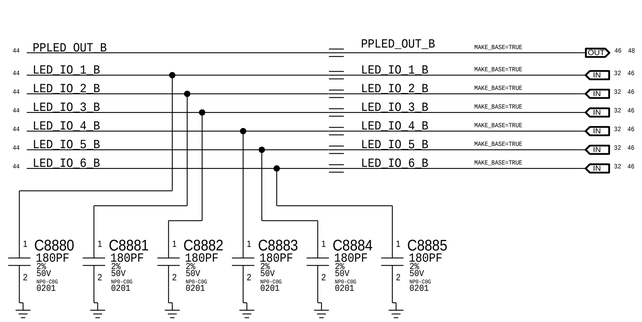

DIODE ALTERNATE

PART NUMBER	ALTERNATE FOR PART NUMBER	BOM OPTION	REF DES	COMMENTS:

SYNC_MASTER=JAMES_MLBB1 SYNC_DATE=12/20/2017

PAGE TITLE

BEACON2

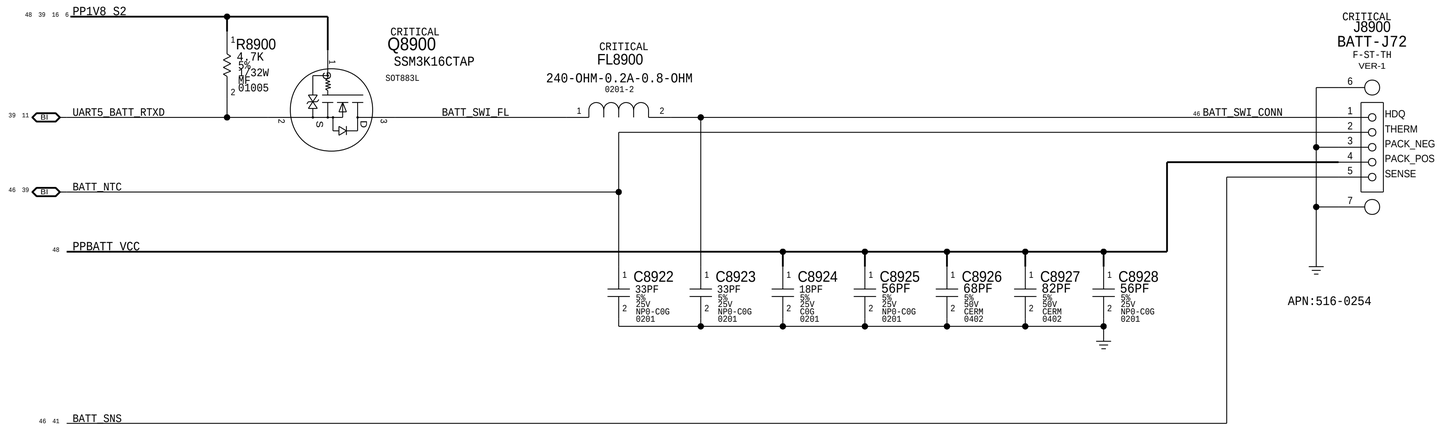

SYNC_MASTER=JAMES_MLBB1 SYNC_DATE=12/20/2017

PAGE TITLE

POWER: BATTERY CONNECTOR

AUDIO

TP9300 A — GPIO_CODEC_IRQ_L — 8 18
TP931B A — GPIO_SOC2CODEC_RST_L — 11 18

TP9304 A — GPIO_CODEC_TO_PMU_WAKE_L — 18 39
TP9320 A — CODEC_HP_DET_R — 18
TP9321 A — CODEC_HP_HS3 — 18
TP9322 A — CODEC_HP_HS3_REF — 18
TP9323 A — CODEC_HP_HS4 — 18
TP9324 A — CODEC_HP_HS4_REF — 18
TP9325 A — CODEC_HP_LEFT — 18 46
TP9326 A — CODEC_HP_RIGHT — 18 46
TP93O4 A — CODEC_HP_LEFT — 18 46
TP93O5 A — CODEC_HP_RIGHT — 18 46
TP9337 A — GND_AUDIO_CODEC — 18
TP93MC A — DMIC1_FF_SCLK_FILT — 17
TP9309 A — DMIC1_FF_SD_FILT — 17
TP931C A — MIKEY_TS_N — 16 18
TP931D A — MIKEY_TS_P — 16 18
TP93H5 A — SPKRAMP_L1_OUT_N — 19 30
TP93H6 A — SPKRAMP_L1_OUT_P — 19 30
TP9370 A — SPKRAMP_L2_OUT_N — 19 30
TP9371 A — SPKRAMP_L2_OUT_P — 19 30
TP93H7 A — SPKRAMP_R1_OUT_N — 20 30
TP93H8 A — SPKRAMP_R1_OUT_P — 20 30
TP93MA A — SPKRAMP_R2_OUT_N — 20 30
TP93MB A — SPKRAMP_R2_OUT_P — 20 30
TP9393 A — PP1V8_S2_VA_VCP — 38 48

BUTTONS

TP9338 A — GPIO_BTN_HOME_CONN_L — 31
TP9339 A — GPIO_BTN_ONOFF_L_FILT — 24
TP9341 A — GPIO_BTN_VOL_DOWN_L_FILT — 24
TP9342 A — GPIO_BTN_VOL_UP_L_FILT — 24

CAMERAS

TP93JA A — PP2V9_CAM — 38 48
TP930A A — PP2V9_AVDD_CAM_FRONT_FILT — 25
TP93J3 A — PP2V9_AVDD_CAM_REAR_FILT — 26
TP93B1 A — PP2V6_CAM_REAR_AF_FILT — 26
TP93A7 A — PP1V8_SW1 — 38 48
TP9301 A — PP1V8_CAM_FRONT_FILT — 25
TP93NB A — PP1V8_CAM_REAR_FILT — 26
TP937C A — PP1V25_CAM_REAR_FILT — 26
TP93B0 A — ISP0_CAM_REAR_CLK — 8 26
TP9353 A — ISP0_CAM_REAR_SCL — 8 26
TP9354 A — ISP0_CAM_REAR_SDA — 8 26
TP9355 A — ISP0_CAM_REAR_SHUTDOWN_L — 8 26
TP93JB A — ISP1_CAM_FRONT_CLK_F — 25
TP93JE A — ISP1_CAM_FRONT_SCL_F — 25
TP93JF A — ISP1_CAM_FRONT_SDA_F — 25
TP93HE A — ISP1_CAM_FRONT_SHUTDOWN_L_F — 25

DISPLAY

TP9372 A — LED_IO_1_A — 32 44
TP9373 A — LED_IO_2_A — 32 44
TP9374 A — LED_IO_3_A — 32 44
TP9375 A — LED_IO_4_A — 32 44
TP9376 A — LED_IO_5_A — 32 44
TP9377 A — LED_IO_6_A — 32 44
TP9378 A — LED_IO_1_B — 32 44
TP9379 A — LED_IO_2_B — 32 44
TP937A A — LED_IO_3_B — 32 44
TP937B A — LED_IO_4_B — 32 44
TP937C A — LED_IO_5_B — 32 44
TP937D A — LED_IO_6_B — 32 44
TP9305 A — PPLED_OUT_A — 44 48
TP93JD A — PPLED_OUT_B — 44 48
TP93DB A — PPLED_BACK_REG_B — 32 46
TP93D0 A — PPLED_BACK_REG_A — 32 46
TP93O0 A — PPLED_BACK_REG_B — 32 46
TP93O1 A — PPLED_BACK_REG_A — 32 46

POWER

TP9391 A — PP0V8_S2_SOC_AOP — 38 48
TP9389 A — PP1V1_S2 — 43 48
TP9390 A — PP1V1_S1_EXT_SW — 42 48
TP9388 A — PP1V2_SOC — 38 48
TP93A3 A — PP1V2_PLL_SOC — 15
TP93A5 A — PP1V2_PLL_CPU — 15
TP9395 A — PP1V8_ALWAYS — 38 48
TP93A0 A — PP1V8_EXT_SW1 — 42 48
TP93A4 A — PP1V8_S2 — 37 48
TP93A6 A — PP1V8_S2_SW3 — 38 48
TP93A2 A — PP1V8_TOUCH_EXT_SW — 42 48
TP93A9 A — PP1V1_XTAL — 6
TP93C0 A — PP3V0_S2_MISC — 38 48
TP93C1 A — PP3V0_S2_TRISTAR — 38 48
TP93C3 A — PP3V3_ACC — 38 48
TP93C4 A — PP3V3_S2 — 37 48
TP93C5 A — PP3V3_EXT_SW — 42 48

TP93D5 A — PPVCC_MAIN — 41 48
TP93D6 A — PPVCC_MAIN_LCD_SW_CONN — 32
TP93D7 A — PPVDD_CPU — 37 48
TP93D8 A — PPVDD_GPU — 37 39 48
TP93D9 A — PPVDD_S1_SOC — 37 48

TP93C9 A — PPBATT_VCC — 41 46 48
TP93CA A — PPBATT_VCC — 41 46 48
TP93CB A — PPBATT_VCC — 41 46 48
TP93CC A — PPBATT_VCC — 41 46 48
TP93CD A — PPBATT_VCC — 41 46 48
TP93CE A — PPBATT_VCC — 41 46 48

TP9340 A
TP9336 A
TP9392 A
TP9394 A
TP9396 A
TP9397 A
TP9398 A
TP9399 A
TP939A A
TP939B A

TP93N7 A — PPVDD_CPU_SRAM — 37 47 48
TP93N8 A — PPVDD_GPU_SRAM — 43 48
TP93N9 A — PPVDD_S1_FIXED — 43 48
TP93NA A — PP0V9_NAND — 38 48

TP93NE A — BATT_SWI_CONN — 45
TP93NF A — BATT_SNS — 41 45

SENSORS

TP93J9 A — PP3V0_ALS — 38 48
TP937E A — PP1V8_PHOS_F — 23
TP937F A — PP1V825_S2_MESA_CONN — 21 31
TP931E A — PP3V1_S2_MESA_CONN — 21 31
TP931F A — PP11V3_MESA_CONN — 21 31
TP93N4 A — GPIO_MESA_TO_BOOST_ENABLE_CONN — 21 31
TP93N6 A — PP3V0_COMPASS — 23
TP93N5 A — PP1V8_S2R_HALL2_FILT — 31
TP930C A — GPIO_HALL_CENTER_TO_PMU_IRQ — 31 39
TP93N2 A — GPIO_HALL_EDGE_TO_PMU_IRQ — 23 39

THERMAL

TP9303 A — BATT_NTC — 39 45
TP9312 A — BOARD_TEMP3_P — 39
TP9313 A — BOARD_TEMP4_P — 39
TP9314 A — BOARD_TEMP5_P — 39
TP9315 A — BOARD_TEMP6_P — 39
TP9316 A — BOARD_TEMP7_P — 39
TP9317 A — BOARD_TEMP8_P — 39

SOC

TP93G9 A — SOC_TESTMODE — 4 6
TP9311 A — AP_JTAG_TDO — 6

NEAR U0600 / NEAR U1700 — TP93I4 A — UART_DEBUG_TO_SOC_TX — 11 16
NEAR U0600 / NEAR U1700 — TP93I5 A — UART_SOC_TO_DEBUG_TX — 11 16
NEAR U0600 / NEAR U1700 — TP93I8 A — UART_ACC_TO_SOC_TX — 11 16
NEAR U0600 / NEAR U1700 — TP93I9 A — UART_SOC_TO_ACC_TX — 11 16

TP93J0 A — USB_SOC_N — 6 16
TP93J1 A — USB_SOC_P — 6 16
TP9360 A — JTAG_SOC_SEL — 4 6
TP9361 A — JTAG_SOC_TCK — 6 16
TP9362 A — AP_JTAG_TDI — 6
TP9363 A — JTAG_SOC_TMS — 6 16
TP9364 A — AP_JTAG_TRST_L — 6
TP933A A — USB_ID — 6
TP9343 A — GPIO_FORCE_DFU — 11 39
TP93G6 A — RESET_PMU_TO_SYSTEM_L — 6 12 39
NEAR U0600 — TP9384 A — CLK_PMU_TO_AOP_32K — 12 39
NEAR U8100 — TP9329 P4MM SM (PP) 1 — SPI_SOC_TO_PMU_SCLK — 10 39 47
TP93NC A — SOCHOT0_PMU_TO_SOC_L — 10 39
TP93ND A — TP_GPIO_DFU_STATUS — 11

E75

TP93N0 A — CONN_DET_L — 30
TP93D1 A — PPOUT_E75_ACC_ID1_CONN — 30 46
TP93D2 A — PPOUT_E75_ACC_ID2_CONN — 30 46
TP93O2 A — PPOUT_E75_ACC_ID1_CONN — 30 46
TP93O3 A — PPOUT_E75_ACC_ID2_CONN — 30 46
TP93D4 A — PPVBUS_USB_FILT — 30 41
TP93DA A — PPVBUS_E75_USB_CONN — 30 46
TP93DC A — PPVBUS_E75_USB_CONN — 30 46
TP93DD A — PPVBUS_E75_USB_CONN — 30 46
TP93DE A — PPVBUS_E75_USB_CONN — 30 46

DELETE ONE IF CAN'T PLACE

TP9330 A — E75_DPAIR1_CONN_N — 30
TP9331 A — E75_DPAIR1_CONN_P — 30
TP9332 A — E75_DPAIR2_CONN_N — 30
TP9333 A — E75_DPAIR2_CONN_P — 30

TP93O6 A — PPVDD_ACC_FET — 16
TP93O7 A — PPVBUS_USB_RVP — 16 41

TOUCH

TP9328 A — GPIO_SOC_TO_BT_TO_TOUCH_TS_SYNC — 11 27 28 33
TP9344 A — GPIO_GRAPE_IRQ_L — 11 27
TP9346 A — GPIO_TOUCH_TO_BT_SYNC — 27 33
TP9345 A — GPIO_GRAPE_RST_L — 11 27 28

TP9307 A — CLK_KONA_M_24MHZ — 27
TP9308 A — PP3V3_TOUCH_EXT_SW — 42 48
TP9306 A — PP15V0_TOUCH_FILT — 27 28
TP930E A — PP2V8_KONA_M_VDDANA — 27
TP930F A — SWD_KONA_SWCLK — 12 27
TP9310 A — SWD_KONA_SWDIO — 12 27
TP9311 A — KONA_JTAG_TDI — 27
TP9319 A — KONA_JTAG_TDO — 27
TP931A A — KONA_JTAG_TRST_L — 27

NEAR U4000 / NEAR U0600 — TP93H1 A — SPI_GRAPE_CS_L — 10 27
NEAR U4000 / NEAR U0600 — TP93H2 A — SPI_GRAPE_MISO — 10 27
NEAR U4000 / NEAR U4000 — TP93H3 A — SPI_GRAPE_MOSI — 10 27
NEAR U4000 / NEAR U4000 — TP93H4 A — SPI_GRAPE_SCLK — 10 27

RF TEST POINTS

TP93I6 A
TP93I7 A

TP93FA A
TP93F9 A
TP93L0 A
TP93L1 A
TP93F8 A
TP93F7 A
TP93E2 A
TP93F6 A
TP93E1 A

WIFI TEST POINTS

NEAR U7500 — TP93K0 A — PCIE_SOC2WLAN_TX_P — 33 35
NEAR U7500 — TP93K1 A — PCIE_SOC2WLAN_TX_N — 33 35
NEAR U0600 — TP93K2 A — 90_AP_PCIE3_RXD_C_P — 7 33
NEAR U0600 — TP93K3 A — 90_AP_PCIE3_RXD_C_N — 7 33
TP93M4 A — PMU_GPIO_CLK_32K_WLAN — 33 35 46
NEAR U7500 — TP93K5 A — UART2_SOC2WLAN_TX — 11 33
NEAR U0600 — TP93K6 A — UART2_WLAN2SOC_TX — 11 33
NEAR U0600 — TP93K8 A — UART2_WLAN2SOC_RTS_L — 11 33
TP93K9 A — PMU_GPIO_WLAN_REG_ON — 33 35
TP93KA A — PMU_GPIO_BT_REG_ON — 33 35
TP93KC A — GPIO_SOC2WLAN_PCIE_DEV_WAKE — 11 33 35
NEAR U7500 — TP93KD A — UART2_SOC2WLAN_RTS_L — 11 33
TP93KE A — TP_JTAG_WLAN_TMS — 33
TP93KF A — JTAG_WLAN_TRST — 33
TP93L2 A — PMU_GPIO_BT_HOST_WAKE — 33 35
TP93L3 A — GPIO_SOC2BT_WAKE — 11 33 35
NEAR U7500 — TP93L4 A — UART_SOC2BT_TX — 11 33 35
NEAR U0600 — TP93L5 A — UART_BT2SOC_TX — 11 33 35
NEAR U7500 — TP93L6 A — UART_SOC2BT_RTS_L — 11 33 35
NEAR U0600 — TP93L7 A — UART_BT2SOC_RTS_L — 11 33 35
TP9365 A — JTAG_WLAN_SEL — 35

TP93LC A — AOP2RADIO_CONTEXT_A — 12 33
TP93LD A — AOP2RADIO_CONTEXT_B — 12 33
TP93LE A — PMU_GPIO_WLAN_HOST_WAKE — 33 35
TP93M1 A — AP_PCIE_CLKREQ3_L — 7 33
TP93M0 A — AP_PCIE_RESET3_L — 7 33
TP93M3 A — TESTPOINT_JTAG_WLAN_TCK — 33

TP -> PP

TP93K4 P4MM SM (PP) 1 — PMU_GPIO_CLK_32K_WLAN — 33 35 46

STANDOFF P/N 860-1596

STD9302 STDOFF-3.3X1.8R1.02H-SM 1 — BATTERY

860-1595

STD9300 STDOFF-3.3X1.8R1.17H-SM-1 1 — GRAPE
STD9301 STDOFF-3.3X1.8R1.17H-SM-1 1 — DISPLAY
STD9303 STDOFF-3.3X1.8R1.17H-SM-1 1 — BATTERY
STD9350 STDOFF-3.3X1.8R1.17H-SM-1 1 — FRONT CAMERA
STD9360 STDOFF-3.3X1.8R1.17H-SM-1 1 — BUTTON FLEX

PLATED THROUGH HOLES
DRILL SIZE: 1.1MM X 0.4MM
PLATING SIZE: 1.4MM X 0.7MM

SL9303 TH-NSP 1
SL-1.1X0.4-1.4X0.7

SYNC_MASTER=J71S_MLB_B SYNC_DATE=01/27/2017
PAGE TITLE
TEST: TP/HOLES/FIDUCIALS

EE CHARACTERIZATION PP

NAND

PLACE NEAR U0601

PP9402	P4MM SM	PP	1	90_PCIE_AP_TO_NAND_REFCLK_P — 5 7
PP9403	P4MM SM	PP	1	90_PCIE_AP_TO_NAND_REFCLK_N — 5 7
PP9434	P4MM SM	PP	1	CLK_SOC_TO_NAND_24MHZ — 5 10

PMU/BEACON2 SPI/DWI

PLACE NEAR U8100

PP9407	P4MM SM	PP	1	SPI_SOC_TO_PMU_DATA — 10 39

PLACE NEAR U8801

PP9408	P4MM SM	PP	1	DWI_SOC_TO_BEACON2_CLK — 10 44
PP9409	P4MM SM	PP	1	DWI_SOC_TO_BEACON2_DATA — 10 44

PLACE NEAR U0600

PP940A	P4MM SM	PP	1	SPI_SOC_TO_PMU_SCLK — 10 39 46
PP940B	P4MM SM	PP	1	SPI_PMU_TO_SOC_DATA — 10 39

PP9441	P4MM SM	PP	1	GPIO_AOP_TO_PMU_SLEEP1_REQUEST — 12 39
PP9442	P4MM SM	PP	1	GPIO_PMU_TO_SYS_SLEEP1_READY — 12 14 39
PP9443	P4MM SM	PP	1	GPIO_AOP_TO_PMU_ACTIVE_REQUEST — 12 39
PP9444	P4MM SM	PP	1	GPIO_PMU_TO_SYSTEM_ACTIVE_READY — 6 12 16 39

AUDIO

PLACE NEAR U1900

PP9421	P4MM SM	PP	1	I2S0_SOC_TO_BELFIELD_MCK — 10 18
PP9422	P4MM SM	PP	1	I2S0_SOC_TO_BELFIELD_BCLK — 10 18
PP9423	P4MM SM	PP	1	I2S0_SOC_TO_BELFIELD_LRCK — 10 18
PP9424	P4MM SM	PP	1	I2S0_SOC_TO_BELFIELD_DOUT — 10 18

PLACE NEAR U0600

PP9425	P4MM SM	PP	1	I2S0_BELFIELD_TO_SOC_DOUT — 10 18

PLACE NEAR U1900

PP9426	P4MM SM	PP	1	SPI_BELFIELD_SCLK — 10 18
PP9427	P4MM SM	PP	1	SPI_BELFIELD_MOSI — 10 18

PLACE NEAR U0600

PP9428	P4MM SM	PP	1	SPI_BELFIELD_MISO — 10 18

PLACE NEAR U1900

PP9460	P4MM SM	PP	1	I2S_AOP_TO_CODEC_BCLK — 12 18
PP9461	P4MM SM	PP	1	I2S_AOP_TO_CODEC_LRCK — 12 18
PP9462	P4MM SM	PP	1	I2S_AOP_TO_CODEC_DOUT — 12 18

PLACE NEAR U0600

PP9463	P4MM SM	PP	1	I2S_CODEC_TO_AOP_DOUT — 12 18

PLACE NEAR U2040

PP9464	P4MM SM	PP	1	I2S2_SOC_TO_SPKRAMP_BCLK_L1 — 19
PP9465	P4MM SM	PP	1	I2S2_SOC_TO_SPKRAMP_LRCK_L1 — 19
PP9466	P4MM SM	PP	1	I2S2_SOC_TO_SPKRAMP_DOUT_L1 — 19

SENSORS

PLACE NEAR U2590

PP9429	P4MM SM	PP	1	SPI_AOP_SCLK — 12 23 47
PP9430	P4MM SM	PP	1	SPI_AOP_MOSI — 12 23 47

PLACE NEAR U2580

PP9431	P4MM SM	PP	1	SPI_AOP_SCLK — 12 23 47
PP9432	P4MM SM	PP	1	SPI_AOP_MOSI — 12 23 47

PLACE NEAR U0600

PP9433	P4MM SM	PP	1	SPI_AOP_MISO — 12 23

MESA SPI

PLACE NEAR U0600

PP940C	P4MM SM	PP	1	SPI_MESA_MISO — 10 21

CAMERA - FRONT

PP940D	P4MM SM	PP	1	MIPI1C_CAM_FRONT_CLK_P — 8 25 47
PP940E	P4MM SM	PP	1	MIPI1C_CAM_FRONT_CLK_N — 8 25 47

PLACE NEAR U0600

PP940F	P4MM SM	PP	1	MIPI1C_CAM_FRONT_DATA_P<0> — 8 25 47
PP9410	P4MM SM	PP	1	MIPI1C_CAM_FRONT_DATA_N<0> — 8 25 47

CAMERA - REAR

PP9411	P4MM SM	PP	1	MIPI0C_CAM_REAR_CLK_P — 8 26 47
PP9412	P4MM SM	PP	1	MIPI0C_CAM_REAR_CLK_N — 8 26 47

PLACE NEAR U0600

PP9413	P4MM SM	PP	1	MIPI0C_CAM_REAR_DATA_P<0> — 8 26 47
PP9414	P4MM SM	PP	1	MIPI0C_CAM_REAR_DATA_N<0> — 8 26 47

WIFI

PLACE NEAR U7500

PP9417	P4MM SM	PP	1	90_AP_PCIE3_REFCLK_P — 7 33
PP9418	P4MM SM	PP	1	90_AP_PCIE3_REFCLK_N — 7 33

SOC

PP9450	P4MM SM	PP	1	ADC_SOC_TO_PMU_VDD_CPU — 13 39
PP9451	P4MM SM	PP	1	AP_VSS_CPU_SENSE — 13
PP9452	P4MM SM	PP	1	ADC_SOC_TO_PMU_VDD_GPU — 13 39
PP9453	P4MM SM	PP	1	AP_VSS_SENSE — 13
PP9480	P4MM SM	PP	1	PMU_TO_AP_BUF_BTN_HOME_L — 11 39
PP9481	P4MM SM	PP	1	PMU_TO_AP_BUF_BTN_ONOFF_L — 11 39
PP9482	P4MM SM	PP	1	PPVDD_CPU_SRAM — 37 46 48

TOUCH

PP9454	P4MM SM	PP	1	TP_KONA_S_UART_RX — 28
PP9455	P4MM SM	PP	1	TP_KONA_S_UART_TX — 28
PP9456	P4MM SM	PP	1	TP_KONA_IPC_EVENT_0 — 28
PP9457	P4MM SM	PP	1	TP_KONA_IPC_EVENT_1 — 28
PP9458	P4MM SM	PP	1	TP_KONA_IPC_EVENT_2 — 28
PP9459	P4MM SM	PP	1	TP_KONA_IPC_EVENT_3 — 28
PP945A	P4MM SM	PP	1	TP_KONA_IPC_EVENT_4 — 28
PP945B	P4MM SM	PP	1	TP_KONA_IPC_EVENT_5 — 28
PP945C	P4MM SM	PP	1	KONA_S_TO_KONA_M_RESET_DET_L — 27 28
PP945D	P4MM SM	PP	1	KMSI_MISO — 27 28
PP945E	P4MM SM	PP	1	KMSI_MOSI — 27 28
PP945F	P4MM SM	PP	1	KMSI_STRB_IN — 27 28
PP9470	P4MM SM	PP	1	KMSI_STRB_OUT — 27 28
PP9471	P4MM SM	PP	1	PSE_SYNC — 27 28

HIGH SPEED, NO TEST

MIPI0C_CAM_REAR_CLK_P	NO_TEST=1		8 26 47
MIPI0C_CAM_REAR_CLK_N	NO_TEST=1		8 26 47
MIPI0C_CAM_REAR_DATA_P<0..3>	NO_TEST=TRUE		8 26 47
MIPI0C_CAM_REAR_DATA_N<0..3>	NO_TEST=TRUE		8 26 47
MIPI0C_CAM_REAR_CLK_FILT_P	NO_TEST=1		26
MIPI0C_CAM_REAR_CLK_FILT_N	NO_TEST=1		26
MIPI0C_CAM_REAR_DATA_FILT_P<0..3>	NO_TEST=TRUE		26
MIPI0C_CAM_REAR_DATA_FILT_N<0..3>	NO_TEST=TRUE		26
MIPI1C_CAM_FRONT_CLK_P	NO_TEST=1		8 25 47
MIPI1C_CAM_FRONT_CLK_N	NO_TEST=1		8 25 47
MIPI1C_CAM_FRONT_DATA_P<0>	NO_TEST=1		8 25 47
MIPI1C_CAM_FRONT_DATA_N<0>	NO_TEST=1		8 25 47
MIPI1C_CAM_FRONT_CLK_FILT_P	NO_TEST=1		25
MIPI1C_CAM_FRONT_CLK_FILT_N	NO_TEST=1		25
MIPI1C_CAM_FRONT_DATA_FILT_P<0>	NO_TEST=1		25
MIPI1C_CAM_FRONT_DATA_FILT_N<0>	NO_TEST=1		25

EDP_DATA_P<0..3>	NO_TEST=TRUE		9 32
EDP_DATA_N<0..3>	NO_TEST=TRUE		9 32
EDP_DATA_EMI_P<0..3>	NO_TEST=TRUE		32
EDP_DATA_EMI_N<0..3>	NO_TEST=TRUE		32
EDP_DATA_EMI_CONN_P<0..3>	NO_TEST=TRUE		32
EDP_DATA_EMI_CONN_N<0..3>	NO_TEST=TRUE		32

SYNC_MASTER=J71S_MLB_B SYNC_DATE=01/27/2017

PAGE TITLE

TEST: EE TP/PP

POWER CONNECTIONS

BUCK0 (ACTIVE)

46 37 PPVDD_CPU — PPVDD_CPU 12400MA 13
MAKE_BASE=TRUE
VOLTAGE=1.0V

BUCK1 (SW CONTROL)

46 39 37 PPVDD_GPU — PPVDD_GPU 8300MA 13
MAKE_BASE=TRUE
VOLTAGE=0.8V

BUCK2 (SLEEP1)

46 37 PPVDD_S1_SOC — PPVDD_S1_SOC 1524MA 13
MAKE_BASE=TRUE
VOLTAGE=0.9V

BUCK3 (SLEEP2)

46 37 PP1V8_S2
MAKE_BASE=TRUE
VOLTAGE=1.8V

PP1V8_S2	100MA	15
PP1V8_S2	1MA	16
PP1V8_S2	1MA	23 31
PP1V8_S2	8MA	6 16 39 45
PP1V8_S2		42
PP1V8_S2	36.4MA	38
PP1V8_S2	430MA	38
PP1V8_S2	60MA	38
PP1V8_S2	1MA	33
PP1V8_S2	20MA	33
PP1V8_S2	25.5MA	18

BUCK3_SW

BUCK3_SW1 (ACTIVE)

46 38 PP1V8_SW1
MAKE_BASE=TRUE
VOLTAGE=1.8V

PP1V8_SW1	0MA	42
PP1V8_SW1	1MA	25
PP1V8_SW1	1MA	26

BUCK3_EXT_SW1 (ACTIVE)

46 42 PP1V8_EXT_SW1
MAKE_BASE=TRUE
VOLTAGE=1.8V

PP1V8_EXT_SW1	9MA	15
PP1V8_EXT_SW1	2MA	8
PP1V8_EXT_SW1	8MA	6
PP1V8_EXT_SW1	20MA	5 12
PP1V8_EXT_SW1	315MA	10
PP1V8_EXT_SW1	5MA	4 7 8 10 39
PP1V8_EXT_SW1	10MA	6
PP1V8_EXT_SW1	4MA	44
PP1V8_EXT_SW1	10MA	

BUCK3_SW3 (SLEEP2)

46 38 PP1V8_S2_SW3
MAKE_BASE=TRUE
VOLTAGE=1.8V

PP1V8_S2_SW3	5MA	23
PP1V8_S2_SW3	1.2MA	23
PP1V8_S2_SW3	16MA	23
PP1V8_S2_SW3	9MA	15
PP1V8_S2_SW3	???	17

BUCK3 EXT SW TOUCH

46 42 PP1V8_TOUCH_EXT_SW — PP1V8_TOUCH_EXT_SW 12 27 28
MAKE_BASE=TRUE
VOLTAGE=1.8V

BUCK4 (SLEEP2)

46 43 PP1V1_S2
MAKE_BASE=TRUE
VOLTAGE=1.1V

PP1V1_S2	638MA	42
PP1V1_S2	1051MA	38
PP1V1_S2	0MA	38
PP1V1_S2	1300MA	14

BUCK4_EXT_SW (SLEEP1)

46 42 PP1V1_S1_EXT_SW
MAKE_BASE=TRUE
VOLTAGE=1.1V

PP1V1_S1_EXT_SW	635MA	14
PP1V1_S1_EXT_SW	3MA	14
PP1V1_S1_EXT_SW		6

BUCK5 (SLEEP1)

46 43 PPVDD_S1_FIXED
MAKE_BASE=TRUE
VOLTAGE=0.9V

PPVDD_S1_FIXED		7
PPVDD_S1_FIXED	11MA	8
PPVDD_S1_FIXED	1430MA	14
PPVDD_S1_FIXED		6

BUCK6 (SLEEP2)

46 37 PP3V3_S2
MAKE_BASE=TRUE
VOLTAGE=3.3V

PP3V3_S2	1160MA	33
PP3V3_S2		42

EXT SW (ACTIVE)

46 42 PP3V3_EXT_SW — PP3V3_EXT_SW 1100MA 5
MAKE_BASE=TRUE
VOLTAGE=3.3V

TOUCH EXT SW (SW CONTROL)

46 42 PP3V3_TOUCH_EXT_SW — PP3V3_TOUCH_EXT_SW 27
MAKE_BASE=TRUE
VOLTAGE=3.3V

BUCK7 (ACTIVE)

47 46 37 PPVDD_CPU_SRAM — PPVDD_CPU_SRAM 354MA 13
MAKE_BASE=TRUE
VOLTAGE=1.05V

BUCK8 (SW CONTROL)

46 43 PPVDD_GPU_SRAM — PPVDD_GPU_SRAM 360MA 13
MAKE_BASE=TRUE
VOLTAGE=0.92V

LDO1 (SLEEP2)

46 38 PP3V0_S2_TRISTAR — PP3V0_S2_TRISTAR 3MA 16
MAKE_BASE=TRUE
VOLTAGE=3.0V

LDO2

46 38 PP1V8_S2_VA_VCP — PP1V8_S2_VA_VCP 10MA 18
MAKE_BASE=TRUE
VOLTAGE=1.8V

LDO3

38 PP3V3_USB — PP3V3_USB 5MA 6
MAKE_BASE=TRUE
VOLTAGE=3.3V

LDO4 (SW CONTROL)

46 38 PP3V0_ALS — PP3V0_ALS 1MA 25
MAKE_BASE=TRUE
VOLTAGE=3.0V

LDO5 (SPARE)

LDO6 (SW CONTROL)

46 38 PP3V3_ACC — PP3V3_ACC 1000MA 16
MAKE_BASE=TRUE
VOLTAGE=3.3V

LDO7 (SLEEP2)

46 38 PP3V0_S2_MISC — PP3V0_S2_MISC 15MA 23
MAKE_BASE=TRUE
VOLTAGE=3.0V

LDO8 (SLEEP2)

38 PP3V1_S2_MESA — PP3V1_S2_MESA 73MA 21 22
MAKE_BASE=TRUE
VOLTAGE=3.05V

LDO9 (SW CONTROL)

38 PP1V25_REAR_CAM — PP1V25_REAR_CAM 360MA 26
MAKE_BASE=TRUE
VOLTAGE=1.25V

LDO10 (ACTIVE)

46 38 PP0V9_NAND — PP0V9_NAND 1007MA 5
MAKE_BASE=TRUE
VOLTAGE=0.9V

LDO11 (ACTIVE)

38 PP2V6_CAM_AF — PP2V6_CAM_AF 80MA 26
MAKE_BASE=TRUE
VOLTAGE=2.6V

LDO13 (ACTIVE)

46 38 PP2V9_CAM
MAKE_BASE=TRUE
VOLTAGE=2.1V

PP2V9_CAM	47MA	26
PP2V9_CAM		25

LDO14 (ACTIVE)

46 38 PP1V2_SOC
MAKE_BASE=TRUE
VOLTAGE=1.2V

PP1V2_SOC	1MA	9
PP1V2_SOC	22MA	15
PP1V2_SOC	37MA	7

LDO015 (SLEEP2)

46 38 PP0V8_S2_SOC_AOP — PP0V8_S2_SOC_AOP 44MA 14
MAKE_BASE=TRUE
VOLTAGE=0.8V

LDO016 (SLEEP2)

38 PP1V825_S2_MESA — PP1V825_S2_MESA 1MA 21
MAKE_BASE=TRUE
VOLTAGE=1.9V

1V2_BUFF (ACTIVE)

39 PP1V2_BUFF — PP1V2_BUFF 1MA 15
MAKE_BASE=TRUE
VOLTAGE=1.2V

CHARGER MAIN

46 41 PPVCC_MAIN
MAKE_BASE=TRUE
VOLTAGE=5.0V

PPVCC_MAIN	2930MA	37
PPVCC_MAIN	2741MA	37
PPVCC_MAIN	449MA	37
PPVCC_MAIN		37
PPVCC_MAIN	1264MA	38
PPVCC_MAIN	237MA	32
PPVCC_MAIN	1371MA	44
PPVCC_MAIN	5MA	22
PPVCC_MAIN	300MA	33 35
PPVCC_MAIN	1000MA	40 42
PPVCC_MAIN	5MA	33
PPVCC_MAIN		16
PPVCC_MAIN		27
PPVCC_MAIN		18 19 20

BATTERY

46 41 PPBATT_VCC — PPBATT_VCC 2890MA 45
MAKE_BASE=TRUE
VOLTAGE=4.7V

ON_BUF

46 38 PP1V8_ALWAYS — PP1V8_ALWAYS 10 39
MAKE_BASE=TRUE
VOLTAGE=1.8V

BACKLIGHT BOOST

46 44 PPLED_OUT_A — PPLED_OUT_A 150MA 32
MAKE_BASE=TRUE
VOLTAGE=26V

46 44 PPLED_OUT_B — PPLED_OUT_B 32
MAKE_BASE=TRUE
VOLTAGE=26V

SYNC_MASTER=J71S_MLB_B SYNC_DATE=01/27/2017

PAGE TITLE

POWER: ALIASES